Cat® Energy Control System (ECS)

Balance of Plant Software Operations Manual

Cat® ECS 200

LEBE20720-00

Caterpillar: Confidential Green

THIS PAGE INTENTIONALLY LEFT BLANK

©2025 Caterpillar. All rights reserved.

Caterpillar: Confidential Green

Table of Contents

TABLE OF CONTENTS 3
FORWARD 8
1.0 GENERAL INFORMATION 9
1.1 INTRODUCTION 9
1.2 APPLICATIONS 9
1.3 DEFINITIONS 10
1.4 REFERENCES 10
2.0 SAFETY 11
2.1 ELECTRICAL SAFETY 11
2.2 ELECTROSTATIC DISCHARGE AWARENESS 11
3.0 GLOSSARY OF TERMS 12
4.0 OVERVIEW 14
5.0 SEPARATE CIRCUIT AFTERCOOLER (3-WAY VALVE & PUMP CONTROL) 15
5.1 FUNCTIONAL DESCRIPTION 15
5.1.1 Operational Logic 15
5.1.2 Flow Diagram: Intercooler/SCAC 16
5.2 3-WAY VALVE CONTROL 16
5.2.1 Temperature Setpoint Calculation 17
5.2.2 PID Controller 17
5.2.3 End Position Sensors 17
5.3 PUMP CONTROL 18
5.3.1 Pump Follow-up Delay Timer 18
5.3.2 Immediate Stop 18
5.4 CONTROL SETPOINTS 18
5.5 DIAGNOSTICS AND FEEDBACK 20
5.5.1 Diagnostics 20
5.5.2 Status Events 20
5.5.3 Data Feedback 21
5.6 INPUT AND OUTPUTS 22
5.7 HMI DISPLAY REQUIREMENTS/CONCEPTS 22
5.7.1 SCAC Valve Control Overview Parameters 22
5.7.2 SCAC Configure Screen 26
6.0 SEPARATE CIRCUIT AFTERCOOLER (RADIATOR CONTROL) 31
6.1 FUNCTIONAL DESCRIPTION 31
6.1.1 Operational Logic 31
6.1.2 Flow diagram: VFD or Single Speed Fan Radiator Control 32
6.2 VFD RADIATOR CONTROL 32
6.2.1 Enable/Disable 33
6.2.2 Temperature Setpoint Calculation 33

©2025 Caterpillar. All rights reserved.

Caterpillar: Confidential Green

6.2.3 PID Controller 34
6.3 Staged Radiator Control (Single Speed Fans) 34
6.3.2 Temperature Setpoint Calculation 35
6.4 Control Setpoints 36
6.5 Diagnostics and Feedback 38
6.5.1 Diagnostics 38
6.5.2 Status Events 38
6.5.3 Data Feedback 39
6.6 Input and Outputs 40
6.7 HMI Display Requirements/Concepts 41
6.7.1 SCAC Radiator Control Overview Parameters 41
6.7.2 SCAC Radiator Configure Screen 42
7.0 ENGINE COOLING CIRCUIT (3-WAY VALVE & PUMP CONTROL) 45
7.1 Functional Description 45
7.1.1 Operational Logic 45
7.1.2 Flow Diagram: Sample Configurations of The Engine Cooling Circuit 47
7.2 3-Way Valve Control 48
7.2.1 Temperature Setpoint Calculation 48
7.2.2 PID Controller 48
7.2.3 End Position Sensors 49
7.3 Pump Control 49
7.3.1 Pump Follow-up Delay Timer 49
7.3.2 Immediate Stop 49
7.4 Control Setpoints 49
7.5 Diagnostics and Feedback 52
7.5.1 Diagnostics 52
7.5.2 Status Events 53
7.5.3 Data Feedback 54
7.6 Inputs and Outputs 54
7.7 HMI Display Requirements/Concepts 55
7.7.1 Engine Cooling Circuit Valve Control Overview Parameters 55
7.7.2 Engine Cooling Circuit and Heating Circuit - Valve Control Configurable Parameters 57
8.0 ENGINE COOLING CIRCUIT (RADIATOR CONTROL) 60
8.1 Functional Description 60
8.1.1 Operational Logic 60
8.1.2 Flow diagram: VFD or Single Speed Fan Radiator Control in Different Use Cases 60
8.2 VFD Radiator Control 62
8.2.1 Enable/Disable 62
8.2.2 Temperature Setpoint Calculation 62
8.2.3 PID Controller 62
8.3 Staged Radiator Control (Single Speed Fans) 63
8.3.1 Regulation To The Outlet Temperature At The Radiator In Engine Cooling Circuit 63

©2025 Caterpillar. All rights reserved.

Caterpillar: Confidential Green

8.3.2 Enable/Disable ... 64
8.3.2 Temperature Setpoint Calculation ... 64
8.4 Control Setpoints ... 64
8.5 Diagnostics and Feedback ... 67
8.5.1 Diagnostics ... 67
8.5.2 Status Events ... 67
8.5.3 Data Feedback ... 68
8.6 Input and Outputs ... 69
8.7 HMI Display Requirements/Concepts ... 70
8.7.1 Engine Cooling Circuit Radiator Control Overview parameters ... 70
8.7.2 Engine Cooling Radiator Configure Screen ... 71
9.0 DUAL CORE RADIATOR ... 74
9.1 Functional Description ... 74
9.1.1 Operational Logic: ... 74
9.1.2 Flow Diagram: Dual Core Radiator For Power-Only Mode ... 74
9.2 Common Dual Core Radiator Control With VFD or Stage Switching ... 75
9.2.1 Calculation of the Control Deviation ... 76
9.3 Control Setpoints ... 76
9.4 Diagnostics and Feedback ... 78
9.4.1 Diagnostics ... 78
9.4.2 Status Events ... 78
9.4.3 Data Feedback ... 78
9.5 Inputs and Outputs ... 79
9.6 HMI Display Requirements/Concepts ... 79
9.6.1 Dual Radiator Control Overview Parameters ... 79
10.0 CUSTOMER SITE HEATING CIRCUIT (3-WAY VALVE & PUMP CONTROL) ... 80
10.1 Functional description ... 80
10.1.1 Operational Logic ... 80
10.1.2 Flow Diagram: Customer Heating Circuit With Cooling Water Heat Exchanger ... 81
10.2 3-Way Valve Control ... 81
10.2.1 Customer Site Heating Circuit 3-Way Valve is Installed in the Heating Circuit ... 82
10.2.2 Customer Site Heating Circuit 3-Way Valve is Installed in the Engine Cooling Circuit ... 82
10.3 Pump Control ... 82
10.4 Control Setpoints ... 82
10.5 Diagnostics and Feedback ... 84
10.5.1 Diagnostics ... 84
10.5.2 Status Events ... 85
10.5.3 Data Feedback ... 86
10.6 Inputs and Outputs ... 87
10.7 HMI Display Requirements/Concepts ... 87
10.7.1 Customer Site Heating Circuit Overview Parameters ... 87
10.7.2 Customer Heating Circuit User Configurable Parameters ... 89

©2025 Caterpillar. All rights reserved.

Caterpillar: Confidential Green

11.0 EXHAUST HEAT EXCHANGER BYPASS WITH CUSTOMER SITE HEATING CIRCUIT 92
11.1 FUNCTIONAL DESCRIPTION 92
11.1.1 Operational Logic 92
11.1.2 Flow diagram: Exhaust Heat Exchanger Scenarios 93
11.2 EXHAUST GAS VALVES CONTROL 94
11.3 CONTROL SETPOINTS 94
11.4 DIAGNOSTICS AND FEEDBACK 96
11.4.1 Diagnostics 96
11.4.2 Status Events 96
11.4.3 Data Feedback 97
11.5 INPUTS AND OUTPUTS 98
11.6 HMI DISPLAY REQUIREMENTS/CONCEPTS 98
11.6.1 Customer Site Heating Circuit with EHE Bypass Overview Parameters 98
11.6.2 Customer Site Heating Circuit with EHE Bypass Configurable Parameters 100
12.0 GENSET ENCLOSURE VENTILATION CONTROL 103
12.1 FUNCTIONAL DESCRIPTION 103
12.1.1 Genset Enclosure Ventilation Control Without Circulating Air 103
12.1.2 Genset Enclosure Ventilation Control With Circulating Air 104
12.2 CONTROL SEQUENCE 105
12.2.1 Ventilation Fan Control 106
12.2.2 Inlet Louver Control 106
12.2.3 Outlet Louver Control 107
12.2.4 Standby Ventilation 107
12.3 CONTROL SETPOINTS 108
12.4 DIAGNOSTICS AND FEEDBACK 112
12.4.1 Diagnostics 112
12.4.2 Status Events 113
12.4.3 Data Feedback 115
12.5 INPUTS AND OUTPUTS 115
12.6 HMI DISPLAY REQUIREMENTS/CONCEPTS 116
12.6.1 Genset Enclosure Ventilation Overview Screen 116
12.6.2 Genset Enclosure Ventilation User Configurable Parameters 118
13.0 SMOKE/FIRE ALARM AND VENTILATION OVERRIDE 121
13.1 FUNCTIONAL DESCRIPTION 121
13.1.1 Fire Alarm 121
13.1.2 Full Ventilation Reaction Add-On For Gas Alarm 121
13.1.3 Prioritization Between Fire Alarm And Gas Alarm 122
13.2 CONTROL SETPOINTS 122
13.3 DIAGNOSTICS AND FEEDBACK 122
13.3.1 Diagnostics 123
13.3.2 Status Events 123
13.3.3 Data Feedback 123

©2025 Caterpillar. All rights reserved.

Caterpillar: Confidential Green

13.4 Inputs and Outputs 123
14.0 EXHAUST GAS AND AUXILIARY TEMPERATURE SENSORS CHP 124
14.1 Exhaust Gas – Additional IO 124
14.1.1 Control Sequence 124
14.1.2 Trip Setpoint Calculation for Exhaust Gas Temperatures 124
14.2 Auxiliary Temperature Sensors 125
14.3 Control Setpoints 125
14.4 Diagnostic and Feedback 127
14.4.1 Diagnostics 127
14.4.2 Data Feedback 128
14.5 Inputs and Outputs 129
14.6 HMI Display Requirements/Concepts 129
14.6.1 Exhaust Gas Temperature Overview Parameters 129
14.6.2 Auxiliary Temperature Overview Parameters 131
14.6.3 Auxiliary Temperature User Configurable Parameters 132
15.0 BALANCE OF PLANT ETHERNET IO MODULE 135
15.1 Configuration Code (CHP & Container) IO Module 136
15.2 Configuration Code (JW & SCAC) IO Module 138
15.3 Configuration Code (JW, SCAC, CHP, Container) IO Module 140
15.4 HMI Display Requirements/Concepts 143
15.4.1 General Display Requirements 144
15.4.2 Balance of Plant Digital Inputs 148
15.4.3 Balance of Plant Digital Outputs 149
15.4.4 Balance of Plant Analog Inputs 150
15.4.5 Balance of Plant Analog Outputs 151
APPENDIX A – LIST OF FIGURES 153
APPENDIX B – LIST OF TABLES 155

©2025 Caterpillar. All rights reserved.

Caterpillar: Confidential Green

Forward

This software operations manual describes the application and features of Balance of Plant (BoP) for electric power gen parallel controls. This document also includes configuration of BoP parameters using HMI (Human Machine Interface). Some data used in this guide is generalized and is provided only for the purpose of comparison or illustration. Also, application screenshots and HMI screen images may be actual screens or simulated and are shown for illustrative purposes only.

The images shown in this document may not be identical to those seen by the user in actual screens. Screen images of the HMI may differ from the actual screens depending on flash file language, flash file version, setpoint configuration or engine interface.

In various places throughout this document, reference is made to the other software manuals related to Cat® ECS 200. Other product specific information and data is available from a variety of sources. For more information, contact the Cat® Dealer or dealer technical communicator (TC) nearest you.

The information in this document is the property of Caterpillar Inc. and/or its subsidiaries. Any copying, distribution, transmission to others, and any use except for which it is loaned is prohibited without written permission.

CAT, CATERPILLAR, their respective logos, “Caterpillar Corporate Yellow” the “Power Edge” trade dress as well as corporate and product identity used herein, are trademarks of Caterpillar and may not be used without permission.

©2025 Caterpillar. All rights reserved.

Caterpillar: Confidential Green

1.0 General Information

1.1 Introduction

The Cat ECS 200 supports the control and monitoring of the components and auxiliary systems required for a genset to operate; this includes cooling system and ventilation control up to a full containerized Combined Heat and Power (CHP) containerized system.

Balance of Plant encompasses systems such as ventilation and cooling circuits (e.g., jacket water and aftercooler systems), and heat recovery. These systems manage the physical environment and thermal conditions around the generator set.

Following are the options available to the user in terms of Balance of Plant

1. Jacket Water (JW) and separate circuit aftercooler cooling (SCAC)
2. Ventilation and Combined Heat and Power (CHP)
3. Or both options (a) and (b)

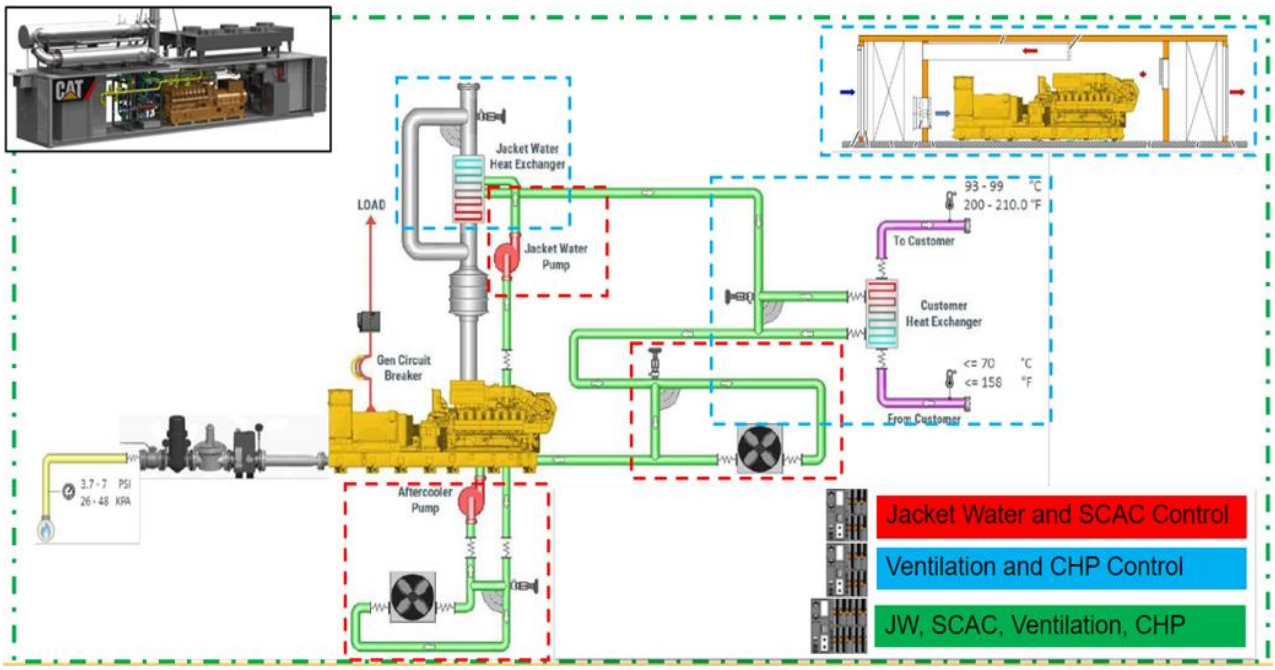

Figure 1.1 Balance of Plant – Choice of Ethernet I/O Module

1.2 Applications

This purpose of this manual is to describe the functionality and control of Balance of Plant software. This manual describes the functions of this software, as well as the setpoints available.

Two controllers are used in this system (Generator Set Controller, and Paralleling Controller). This manual describes all functions and setpoints of BoP in both controllers and outlines in which controller they reside. It also describes the overview of BoP in the HMI screen including configuration of required parameters.

©2025 Caterpillar. All rights reserved.

Caterpillar: Confidential Green

1.3 Definitions

Delay: While the corresponding controls are active, Delay refers to the time in which a signal needs to be stable before the event is triggered.

Pre-Condition Delay: It refers to the starting time of monitoring signals due to starting of the corresponding controls (i.e. it is the delay time after the start of the control, during which the error value of the signal is ignored / no event is raised).

ERC: It is a type of "Warning" that indicates "no shutdown" but may need to get acknowledged by a user.

Soft Shutdown: It refers to a shutdown via a fast power reduction ramp.

Shutdown: It is a type ERCs that needs to be acknowledged by the user. Shutdown events prevent start of the genset until they are cleared.

1.4 References

The hardware that this software uses is not specific to this application. Therefore, the following documents contain important information relating to this, and other applications:

- Cat Energy Control System (ECS) Hardware Manual
- Cat Energy Control System (ECS) Software Operations Manual - Paralleling Generator Set Control
- Cat Energy Control System (ECS) 200 - Service and Troubleshooting Manual
- HMI Manual – Paralleling Generator Set Control
- Expansion Module Manual (DIO, RTD, TC, Annunciators, Remote Ethernet modules)
- CDVR Manual
- MODBUS Register List
- SCADA Manual
- Detailed Wiring Diagrams

©2025 Caterpillar. All rights reserved.

Caterpillar: Confidential Green

2.0 Safety

2.1 Electrical Safety

DO NOT operate or work on a generator set unless you have read and understand the instructions and warnings in the “Operation and Maintenance Manual”. Failure to follow the instructions or heed the warnings could result in injury or death. Contact any Cat® dealer for replacement manuals. Proper care is your responsibility.

Figure 2.1 Safety Logo

WARNING

2.2 Electrostatic Discharge Awareness

The controller contains components that are sensitive to ELECTROSTATIC DISCHARGE (ESD). An electrostatic charge can damage the control resulting in controller breakdown or improper operation.

Take the following precautions while installing/removing/handling the controls:

- Handle equipment correctly. Use ESD protective packaging and material handling containers that are antistatic and provide discharge protection and electric field suppression.
- Use protective devices: ESD-protective workstations and/or work surfaces (grounding mat, anti-static wrist strap, etc.).
- Keep all plastic items away from the devices. Any plastic item is a potential static generator. This includes candy wrappers, foam cups, synthetic carpet, foam cushions, etc.
- The anti-static bag cannot function as a static dissipating mat.
- DO NOT use an anti-static bag for any other purpose than to enclose a product.

Caution: The connectors on the face of the controller are the most vulnerable areas to ELECTROSTATIC DISCHARGE (ESD). While handling the controller, extra attention is required to these areas. The control may become damaged or inoperable if extra care is not taken.

Note: Locking out the generator set does not necessarily remove voltage on the controller at the voltage sensing leads. Consult the Electrostatic Discharge Association for proper procedure for these situations.

©2025 Caterpillar. All rights reserved.

Caterpillar: Confidential Green

3.0 Glossary of Terms

BoP - Balance of Plant

Cat® ECS - Cat® Energy Control System (Marketing name for the control system).

CHP - Combined Heat and Power Plant

CL - Competence Level

CPH - Coolant Preheating

CWHE - Cooling Water Heat Exchanger

D6C - General name of HMI display

D6C8 - HMI with 8-inch display size.

ECC - Engine Cooling Circuit

EHE - Exhaust Gas Heat Exchanger

EmCC - Emergency Cooling Circuit

EmCC Rec - Emergency Cooling Circuit Recooler

ERC - Error Response Code

ESD - Electrostatic Discharge

ETC - Exhaust Turbocharger

F - Frequency

FC - Frequency Converter

FCC - Frequency Converter Cabinet

FMI - Failure Mode Identifier. The CAN term for a failure code is associated with a particular suspect parameter number. For a complete list of FMI codes, refer to the “Cat ECS 200 Service and Troubleshooting Manual”.

Genset Display - Nomenclature for on-package HMI display.

Genset Remote Display - Nomenclature for remote HMI display.

GSC - Generator Set Controller. This is the module responsible for the overall generator protection and control functions. It is the master module on the generator set, interfacing with the user as well as the engine ECM and any other accessory modules.

HC - Heating Circuit

©2025 Caterpillar. All rights reserved.

Caterpillar: Confidential Green

HMI - Human Machine Interface.

HP - High Pressure

HT - High Temperature

I/O - Input/Output

JWC - Jacket Water Cooling

JWH - Jacket Water Heater

LFSM - Limited Frequency Sensitive Mode

LT - Low Temperature

Modbus TCP/IP - An application layer messaging protocol that provides client/server communications between devices connected to different types of buses or networks.

P - Pressure

P diff - Differential Pressure

RP - Reduced Power

RTD - Resistance Temperature Detector

SC - Shutdown Controlled

SCAC - Separate Circuit Aftercooler Cooling

SCADA - Supervisory Control and Data Acquisition. This term represents any computing system designed to perform high-level control and monitoring over various subsystems. On the controller, Caterpillar provides a MODBUS interface to allow any SCADA systems to connect and collect data about the operations of the control and the generator set(s).

SPN - Suspect Parameter Number. The CAN term for any parameter whose data is transmitted over a CAN network, such as the controller primary or accessory data link. For a complete list of SPNs supported by the HMI, refer to the “Cat ECS 200 Service and Troubleshooting Manual”.

T - Temperature

VFD - Variable Frequency Drive

©2025 Caterpillar. All rights reserved.

Caterpillar: Confidential Green

4.0 Overview

The Cat® Energy Control System (ECS) is a sophisticated control system designed for gensets that also facilitates the management of supplementary systems necessary for engine operation but not inherently part of the genset. These supplementary systems are referred to as Balance of Plant (BoP).

For instance, BoP could include radiator and/or ventilation control or even encompass a comprehensive combined heat and power (CHP) solution. This document outlines the specific functionalities and requirements for BoP, particularly focusing on elements classified as Cat® ECS BoP.

Cat ECS is defined as a modular control system that governs the functioning of gensets across various extensions and application scenarios. One integral function within Cat ECS is the Balance of Plant (BoP), which encompasses control functions ensuring optimal environmental conditions for gas engine operations while integrating it into the customer's heat utilization framework. This includes controls for radiators and/or ventilation up to full CHP integration. The chapters in this document detail the functionalities required for the BoP.

The specifications are based on the following requirements for integration into the overall system:

- BoP is established and integrated using a BoP-specific IO controller, including the necessary sensors and actuators for control. Additionally, sensor technology is employed to detect suboptimal conditions within enclosed areas of the installation, influencing or being influenced by the controls.

©2025 Caterpillar. All rights reserved.

Caterpillar: Confidential Green

5.0 Separate Circuit Aftercooler (3-Way Valve & Pump Control)

5.1 Functional Description

The purpose of the Low Temperature cooling circuit is to control the temperature at the inlet into the Intercooler/SCAC, which is used to cool the compressed air after the exhaust turbocharger. The key components of controlling temperature are the radiator, 3-way valve and pump. This chapter will focus on the control logic for the 3-way valve and pump.

A 3-way valve diverts coolant either through a radiator or bypasses it back to the engine depending on temperature and has three ports and can be configured in two main ways:

- Mixing Valve: Combines two inlet flows into one outlet.
- Diverting Valve: Splits one inlet flow into two outlet paths.

Availability of 3-way-valve regulation and pump is tied to the parameter “Separate Circuit Aftercooler Coolant Mixing Valve Installation Status” and is used to disable the output when the mixing valve controller is not needed for cases where the engine has a mechanical thermostat or if it is controlled by the engine controller. There user is able to select whether an electric 3-way valve is used or not.

1. **No 3-Way valve Control:** For generator sets with mechanical thermostats and engine mounted pumps the control needs to be disabled.
2. **3-Way valve Control:** The 3-Way valve either in power only or CHP scenario (for details see section “Flow diagrams”) is used to increase/decrease the return temperature at the inlet of the engine to the required setpoint.

5.1.1 Operational Logic

Startup Phase:

- Genset start is initiated
  - Pump and valve regulation is started
  - 3-way valve bypasses radiator.
  - Pump circulates coolant through engine only.

Warm-Up Phase:

- Temperature rises.
- Valve begins to mix flow between bypass and radiator.
- Pump maintains flow rate.

Normal Operation:

- Engine reaches optimal temperature.
- Valve maintains setpoint temperature.
- Pump maintains steady flow.

Shutdown:

- Pump and valve regulation is stopped after the engine state has changed to “engine stopped” and “Separate Circuit Aftercooler Pump Deactivation Delay Time” has expired.

©2025 Caterpillar. All rights reserved.

Caterpillar: Confidential Green

5.1.2 Flow Diagram: Intercooler/SCAC

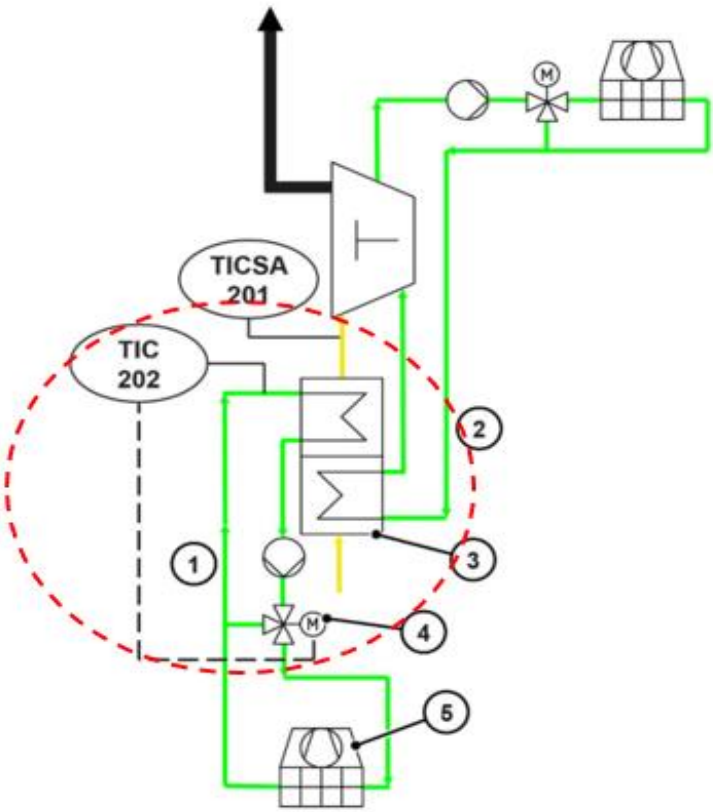

Figure 5.1 Flow Diagram - Intercooler/SCAC

1. Intercooler / SCAC low-temperature stage
2. Intercooler / SCAC high-temperature stage
3. Intercooler / SCAC
4. 3-way valve Intercooler / SCAC
5. Radiator in Intercooler / SCAC

5.2 3-Way Valve Control

Purpose: The 3-way valve in the Low Temperature (LT) Cooling Circuit regulates the inlet temperature of the Intercooler / SCAC (Separate Circuit Aftercooler) system. This ensures optimal engine performance by maintaining the desired temperature at the engine inlet.

Control Strategy: The LT circuit controller continuously monitors the intercooler/SCAC inlet temperature. It compares the actual temperature to a predefined setpoint. A PID (Proportional-Integral-Derivative) control algorithm calculates the required valve position to minimize the temperature deviation.

Valve Operation: The 3-way valve modulates coolant flow between bypass line (minimum cooling) and radiator (maximum cooling).

©2025 Caterpillar. All rights reserved.

Caterpillar: Confidential Green

Table 5.1 3-Way Valve Operation Based on Output Signal

Output Signal	Valve Position	Flow Direction
4 mA (0%)	Fully Bypassed	All coolant bypasses radiator (Minimum Cooling)
12 mA (50%)	Mid Position	Coolant is split between bypass and radiator
20 mA (100%)	Fully Radiated	All coolant flows through radiator (Maximum Cooling)

Control Loop Summary:

- Sensor measures intercooler inlet temperature.
- Controller compares it to the setpoint.
- PID algorithm calculates the required valve position.
- Analog signal (4–20 mA) is sent to the valve actuator.
- Valve adjusts flow path accordingly.
- Digital feedback confirms valve position to the controller.

5.2.1 Temperature Setpoint Calculation

The temperature setpoint varies with the engine's power, represented as a percentage of its rated power. It is updated through linear interpolation between Max at 40% power and Min at 100% power. Values outside this range remain fixed at Min or Max. The graph below illustrates the curve.

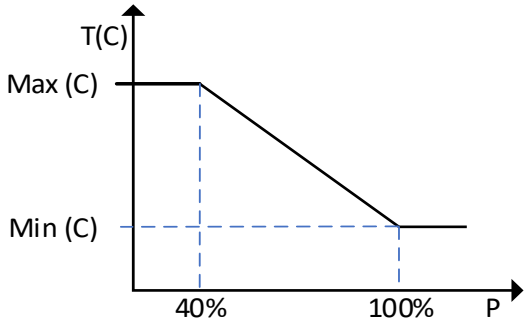

Figure 5.2 Temperature Setpoint Calculation Curve – 3 Way Valve Control

5.2.2 PID Controller

The PID controller is used to accurately adjust and control the responsiveness of the 3-way valve to correct the inlet temperature to the intercooler/SCAC to match the desired setpoint. The PID controller has three configurable setpoints for proportional gain, integral gain and derivative gain with anti-windup protection to prevent integral windup (e.g. max, and min-clipping).

The output of the PID Loop should be a relative value (0 – 100%) that can be used to drive the connected 3-way valve. (100% indicates maximal cooling.)

5.2.3 End Position Sensors

Since control logic needs to know when the valve is at one of its two stop positions, end position sensors must be available and connected to two digital inputs. The current position gets summarized from the status of the digital inputs by three states: warm (0%), in between (50%), and cold (100%).

©2025 Caterpillar. All rights reserved.

Caterpillar: Confidential Green

5.3 Pump Control

Pump control output signal is controlled based on enable/disable signal, immediate stop, and an internal deactivation delay timer. The pump is controlled from a digital output for start/stop and digital input for a pump differential pressure for protection.

5.3.1 Pump Follow-up Delay Timer

The pump follow-up timer is a feature that allows the pump to operate after genset is stopped so that heat can be equally distributed continuously through the system. Any need for an immediate stop overrules pump start demand or delay timer regarding pump output signal. Delay timer remains active until it expires, meaning that regulation output is reactivated if the immediate stop gets reset while the activation signal is still valid.

Note: This is a delay timer additionally to SPN 29247 (SPN 29247 refers to aftercooling, post engine stop).

5.3.2 Immediate Stop

An E-Stop overrules any active pump demand and switches off the circulation pump activation signal output. The output signal to the pump remains switched off as long as the immediate stop is active. If the immediate stop condition signal is withdrawn, regulation output might get reactivated due to activation demands from enable/disable or pump deactivation delay timer.

5.4 Control Setpoints

This subsection contains the complete collection of function-related parameters required to set-up and tune the control.

Table 5.2 SCAC 3-Way Valve and Pump Control Setpoints

Parameter	Resolution	Unit	Range / Status
Separate Circuit Aftercooler Coolant Mixing Valve Installation Status	-	-	Installed Not Installed
Engine Fuel #1 Minimum Desired Separate Circuit Aftercooler Coolant Temperature	0.1	°C	[0,200]
Engine Fuel #1 Maximum Desired Separate Circuit Aftercooler Coolant Temperature	0.1	°C	[0,200]
Separate Circuit Aftercooler Valve Control (Proportional) Gain %	0.01	%	[0,100]
Separate Circuit Aftercooler Valve Control (Integral) Gain %	0.01	%	[0,100]
Separate Circuit Aftercooler Valve Control (Derivative) Gain %	0.01	%	[0,100]
Separate Circuit Aftercooler Pump Deactivation Delay Time Post Engine Stop	1	s	[0,3600]
Separate Circuit Aftercooler Coolant Pump Diagnostic Response Configuration			Warning Soft Shutdown
Separate Circuit Aftercooler Coolant Temperature Minimum Input Value	0.1	°C	[0,200]
Separate Circuit Aftercooler Coolant Temperature Maximum Input Value	0.1	°C	[0,200]

Separate Circuit Aftercooler Coolant Mixing Valve Installation Status

Used to read and program the installation status of the engine's separate circuit aftercooler (SCAC) temperature control module.

©2025 Caterpillar. All rights reserved.

Caterpillar: Confidential Green

Engine Fuel #1 Minimum Desired Separate Circuit Aftercooler Coolant Temperature
Used to read and program the minimum desired coolant temperature for the Separate Circuit Aftercooler for Engine Fuel #1.

Engine Fuel #1 Maximum Desired Separate Circuit Aftercooler Coolant Temperature
Used to read and program the maximum desired coolant temperature for the Separate Circuit Aftercooler for Engine Fuel #1.

Separate Circuit Aftercooler Valve Control (Proportional) Gain Percentage
Used to read and program the proportional gain for a PID controller used to control the separate circuit aftercooler valve position as an absolute percentage of factory set proportional gain. This is used to control the Separate Circuit Aftercooler Valve Position between Open and Closed.

A value of 100% means, that difference between actual water temperature and its setpoint of +/- 1°C leads to fully closed or fully opened valve, if both other parameters are set to 0%.

Separate Circuit Aftercooler Valve Control (Integral) Gain Percentage
Used to read and program the integral gain for a PID controller used to control the separate circuit aftercooler valve position as an absolute percentage of factory set integral gain. This is used to control the Separate Circuit Aftercooler Valve Position between Open and Closed.

A value of 100% means that an integral of the difference between actual water temperature and its setpoint of +/- 1°C leads to fully closed or fully opened valve, if both other parameters are set to 0%.

Separate Circuit Aftercooler Valve Control (Derivative) Gain Percentage
Used to read and program the derivative gain for a PID controller used to control the separate circuit aftercooler valve position as an absolute percentage of factory set derivative gain. This is used to control the Separate Circuit Aftercooler Valve Position between Open and Closed.

A value of 100% means, that a derivate of the difference between actual water temperature and its setpoint of +/- 1°C leads to fully closed or fully opened valve, if both other parameters are set to 0%.

Separate Circuit Aftercooler Pump Deactivation Delay Time Post Engine Stop
Used to read and program the maximum amount of time the separate circuit aftercooler pump continues to run after the engine is stopped.

Separate Circuit Aftercooler Coolant Pump Diagnostic Response Configuration
Used to read and program the desired system response to a Separate Circuit Aftercooler Coolant Pump diagnostic.

©2025 Caterpillar. All rights reserved.

Caterpillar: Confidential Green

Separate Circuit Aftercooler Coolant Temperature Minimum Input Value
Used to read and program the Separate Circuit Aftercooler Coolant Temperature that corresponds to the minimum input value. (Reference SPN 20807 Separate Circuit Aftercooler Coolant Temperature). For example, for a current loop sensor, the minimum input value is the value to be used when the sensor is outputting 4mA.

Separate Circuit Aftercooler Coolant Temperature Maximum Input Value
Used to read and program the Separate Circuit Aftercooler Coolant Temperature that corresponds to the maximum input value. (Reference SPN 20807 Separate Circuit Aftercooler Coolant Temperature). For example, for a current loop sensor, the maximum input value is the value to be used when the sensor is outputting 20mA.

5.5 Diagnostics and Feedback

5.5.1 Diagnostics
The following table defines the diagnostics events associated with this feature:

Table 5.3 SCAC 3-Way Valve and Pump Control Diagnostics Events

SPN	Name	ERC	Description	Delay	Pre-Condition Delay
20807	Engine Aftercooler Coolant Temperature	Soft Shutdown Warning	Separate Circuit Aftercooler Inlet sensor error (current/signal level above/below normal range)	300s	0s
20809	Separate Circuit Aftercooler Coolant Differential Pressure Switch Status	Soft Shutdown Warning	Separate Circuit Aftercooler Differential Pressure too Low	300s	30s
20810	Engine Aftercooler Coolant Pump Control	-	Separate Circuit Aftercooler pump failed (digital feedback)	0	0
3676	Separate Circuit Aftercooler Coolant Level	Hard Shutdown	Separate Circuit Aftercooler low coolant level	0	0

5.5.2 Status Events
The following table defines the status events associated with this feature:

©2025 Caterpillar. All rights reserved.

Caterpillar: Confidential Green

Table 5.4 SCAC 3-Way Valve and Pump Control Status Events

Name	Description	Delay	Pre-Condition Delay
Separate Circuit Aftercooler control valve limit position switch COLD (OPEN) Activated	The digital input for the switch that reflects the "cold" position being reached on the separate circuit aftercooler control valve has been activated. This digital input identifies that the valve is now fully open to provide the maximum amount of cooling for the engine.	3s	0s
Separate Circuit Aftercooler Control Valve Cold Position Switch Deactivated	The digital input for the switch that reflects the "cold" position being reached on the separate circuit aftercooler control valve has been deactivated. This digital input identifies that the valve is no longer fully open and may be in a mixing position.	3s	0s
Separate Circuit Aftercooler Control Valve Warm Position Switch Activated	The digital input for the switch that reflects the "warm" position being reached on the separate circuit aftercooler control valve has been activated. This digital input identifies that the valve is now fully closed to provide maximum heat to the engine.	3s	0s
Separate Circuit Aftercooler Control Valve Warm Position Switch Deactivated	The digital input for the switch that reflects the "warm" position being reached on the separate circuit aftercooler control valve has been deactivated. This digital input identifies that the valve is no longer fully closed and may be in a mixing position.	3s	0s
Separate Circuit Aftercooler Coolant Pump Start Command Activated	Indicates that Separate Circuit Aftercooler Coolant Pump command signal has been activated.	0s	0s
Separate Circuit Aftercooler Coolant Pump Start Command Deactivated	Indicates that Separate Circuit Aftercooler Coolant Pump command signal has been deactivated.	0s	0s

5.5.3 Data Feedback

The following table defines the data feedback associated with this feature:

Table 5.5 SCAC 3-Way Valve and Pump Control Data Feedback

SPN	Name	Description	Unit
20807	Engine Aftercooler Coolant Temperature	Temperature of liquid found at the intake to the Separate Circuit Aftercooler located after the turbocharger.	°C
20808	Engine Desired Aftercooler Coolant Intake Temperature (High Resolution)	Indicates the desired temperature of the fluid in the low temperature aftercooler circuit to an electronic thermostat.	°C
1134	Engine Charge Air Cooler Thermostat Opening	The current position of the thermostat used to regulate the temperature of the engine charge air cooler. A value of 0 % represents the thermostat being completely closed and 100 % represents the thermostat being completely open.	%
4200	Engine Desired Aftercooler Coolant Thermostat Opening	Used to transmit the desired position of the low temperature aftercooler temperature control valve. 0% represents the thermostat allows flow to completely bypass the heat emission and 100% represents the flow is fully through heat emission.	%
20810	Engine Aftercooler Coolant Pump Control	This control is used to activate a separate circuit aftercooler coolant pump	-

©2025 Caterpillar. All rights reserved.

Caterpillar: Confidential Green

5.6 Input and Outputs

The following table defines the BoP Ethernet Controller hardware IO signals required for SCAC 3-way valve and pump control.

Table 5.6 SCAC 3-Way Valve and Pump Control I/O Signals

Descriptive Name	Status	DI	DO	AI (4-20mA)	AO (4-20mA)
Separate Circuit Aftercooler Coolant Pump Start	24V = On		X		
Separate Circuit Aftercooler Coolant Pump Failed Indicator	Open = Fault	X			
Separate Circuit Aftercooler Coolant Differential Pressure Switch	Open = Fault	X			
Separate Circuit Aftercooler Coolant Level	Open = Fault	X			
Engine Aftercooler Coolant Temperature	Configurable			X	
Separate Circuit Aftercooler 3-Way Valve Control	0-100%				X
Separate Circuit Aftercooler 3-Way Valve Opening at 0 % (heat export)	24V = 0%	X			
Separate Circuit Aftercooler 3-Way Valve Opening at 100 % (heat export)	24V = 100%	X			

5.7 HMI Display Requirements/Concepts

The controller supports the following visualizations relating to separate circuit aftercooler (3-way valve and pump control).

Note: All the information's related to HMI screen including installation (mounting location, electrical connection, power requirements, mechanical specifications, operating temperature details); Initial Operation (menu, submenu and screen layout details); flashing behavior; user level security; on screen digital annunciator; custom screens; preferences and loss of communication are explained in detail in the "Cat® ECS HMI Manual – Paralleling Genset Control" for both genset display and genset remote display. Refer to the above-mentioned document for more information. This document is intended to cover only HMI information associated with Balance of Plant.

5.7.1 SCAC Valve Control Overview Parameters

Along with the Balance of Plant, following are the other overview screens available to the user to see the status of each parameter related to the associated feature. To see the overview screens the user can navigate to: Menu → Overviews and then can select the following associated screens.

- System Overview
- Paralleling
- Genset Overview
- Engine Overview
- AC Overview
- IO Overview
- Voltage Regulator Overview
- Network Status Overview
- kW Load Histogram Overview
- Balance of Plant
- Grid Code

The Separate Circuit Aftercooler (SCAC) and Radiator overview screen should be accessible through the menu location within the HMI navigation in (See Figure 5.3):
Menu → Overviews → Balance of Plant → Separate Circuit Aftercooler and Radiator.

©2025 Caterpillar. All rights reserved.

Caterpillar: Confidential Green

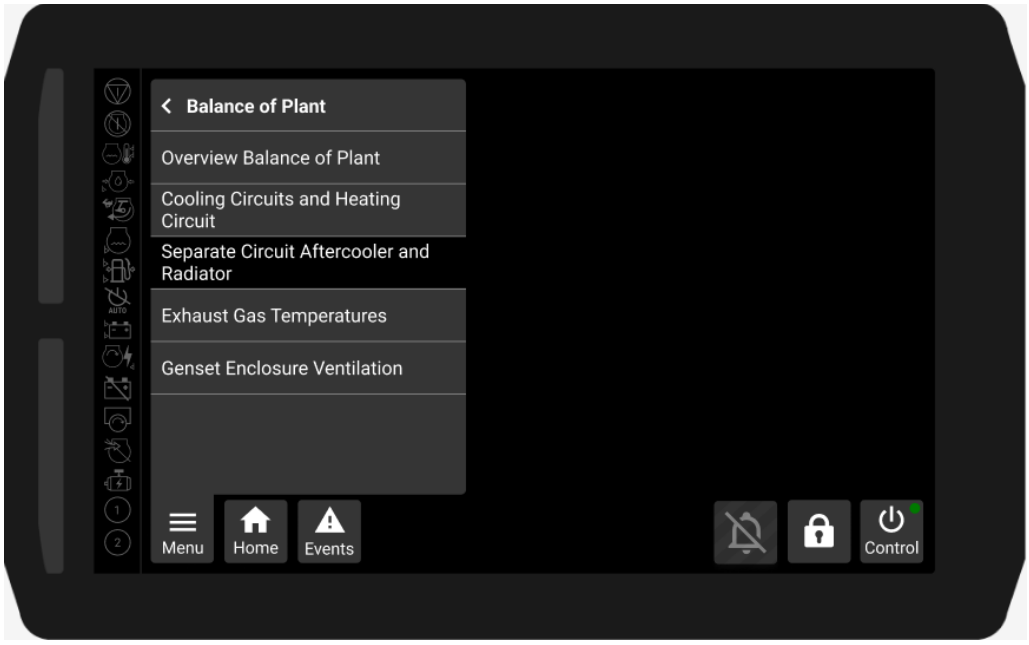

Figure 5.3 Balance of Plant Submenu (Separate Circuit Aftercooler and Radiator)

At the SCAC and radiator overview screen, the parameters are being displayed along with their respective values and units. At the top right-side corner, a shortcut to move between other "Balance of Plant" overview menu, is available. This allows users to scroll through all screens from this menu without opening the Balance of Plant submenu. If the last screen from the submenu is reached and the user clicks on the right button, the user will return to the first screen from the submenu.

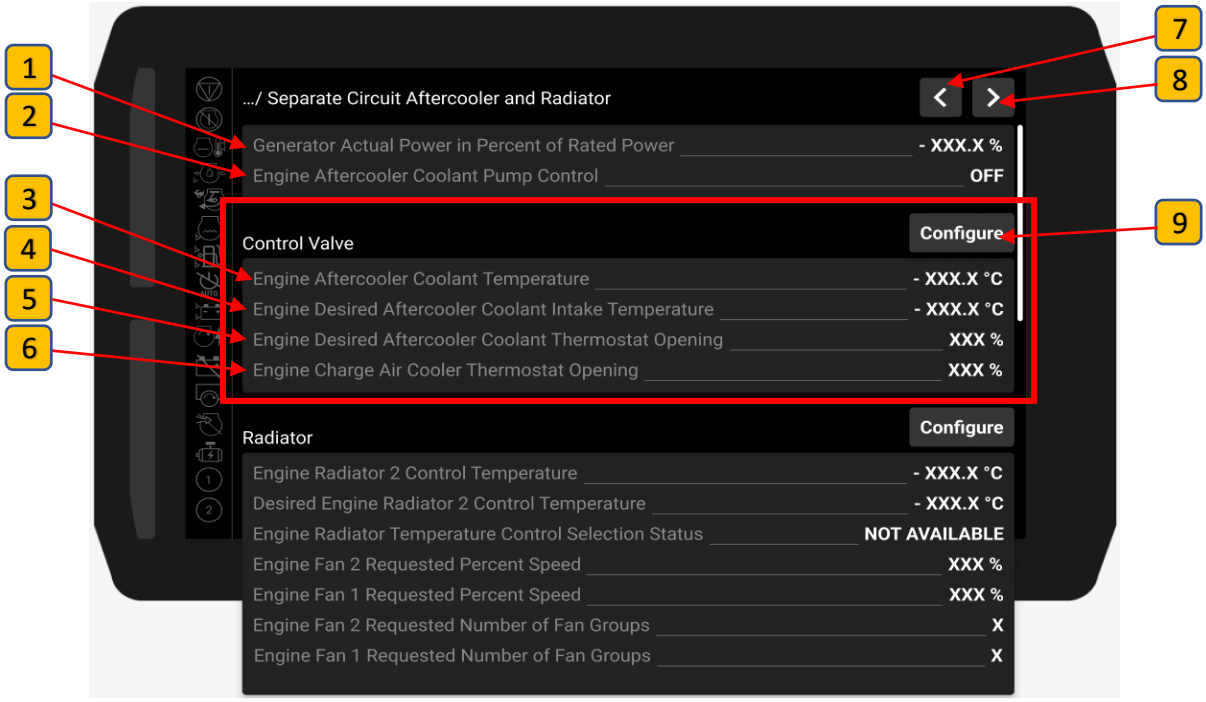

Figure 5.4 Separate Circuit Aftercooler and Radiator Overview Screen – Valve Control Section

©2025 Caterpillar. All rights reserved.

Caterpillar: Confidential Green

Figure 5.4 shows the separate circuit aftercooler and radiator overview screen. Some of the overview screens are directly related to specific configure screens. Corresponding shortcut buttons are also available to these screens to make it quicker and easier to jump back and forth between the overview and configure screens (See Reference [9]). The user needs to use scroll bar to see all the data.

Note: This section only covers the parameters associated with SCAC Valve control as highlighted in the figure 5.4. For the details about parameters associated with SCAC Radiator control refer to section 6.7.1 "SCAC Radiator Control Overview Parameters".

Table 5.7 SCAC and Radiator Overview Screen – Valve Control Parameters

Ref	Parameter Name	Unit	Valid Data Range
1	Generator Actual Power in Percent of Rated Power	%	-251 to 250.99%
2	Engine Aftercooler Coolant Pump Control	-	ON OFF
3	Engine Aftercooler Coolant Temperature	°C	-273 to 1735 °C
4	Engine Desired Aftercooler Coolant Intake Temperature (High Resolution)	°C	-273 to 1735 °C
5	Engine Desired Aftercooler Coolant Thermostat Opening	%	0 to 100%
6	Engine Charge Air Cooler Thermostat Opening	%	0 to 100%
7	Shortcut to Cooling Circuits and Heating Circuit Overview Screen	-	-
8	Shortcut to Exhaust Gas Temperature Overview Screen	-	-
9	Shortcut to Separate Circuit Aftercooler Configure Screen	-	-

BoP offers options for different plant designs. To enable the users to focus or get a quick view on the data relevant for his plant setup, unnecessary information is hidden.

Each parameter on the SCAC and radiator overview screen is shown or hidden based on the "BoP data status" states defined below.

- Valid Data
- Error: show the data value in Red Font
- Comms Loss: show "---" for raw and scaled values
- Hide value

1. **Valid Data:** If the parameters within a BoP overview screen have valid data it will display the data associated with each parameter as shown in figure 5.4.

2. **Error:** The data values associated with any parameter that are Invalid/Error will have a BoP data status as "Error". For such cases the HMI will continue to show the data values, however the invalid data will be displayed in the **RED** color to indicate the distinction between valid and invalid values (See Figure 5.5).

©2025 Caterpillar. All rights reserved.

Caterpillar: Confidential Green

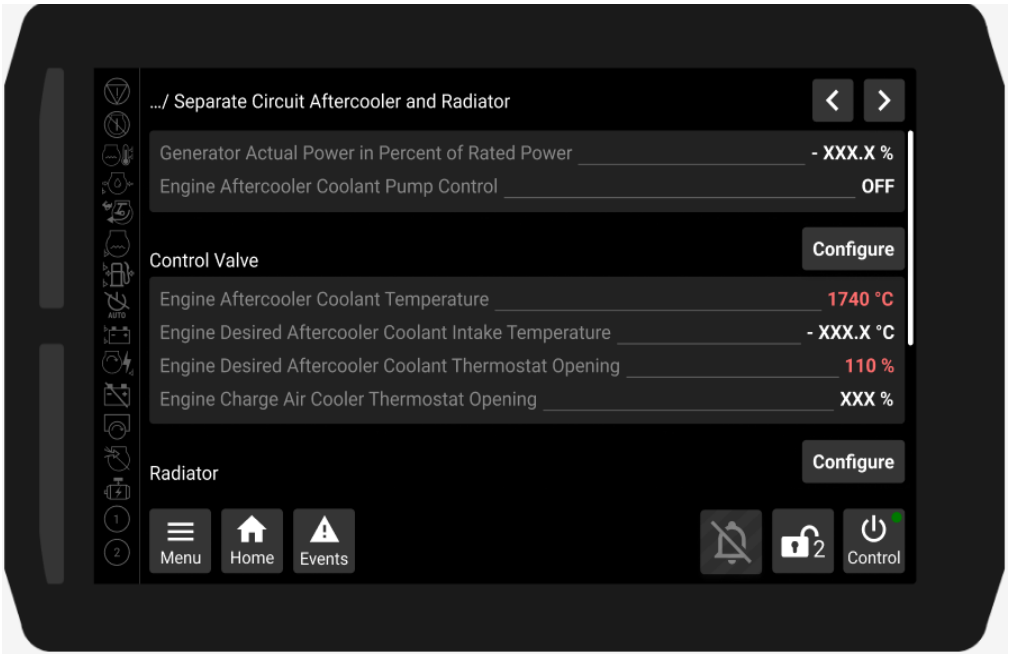

Figure 5.5 Separate Circuit Aftercooler and Radiator Overview Screen – Invalid/Error Data

3. **Comms Loss:** During loss of communication the BoP will have the status as "Comms Loss" and the data value is not available to the user. In this case the HMI will display "---" as shown in the figure 5.6.

   <u>System Boot Up Behavior:</u>
   During system power up, until valid values are received for the first time by the HMI from the paralleling controller, no values will be shown to the user. Until the system is ready to show real (sensor) data the HMI will continue to display dashes similar to comms loss state i.e. "---.-" for each of the parameter values shown on the screen being viewed.

   After the successful boot up of the system and valid values are first read, the distinction between valid and invalid values becomes important information for the user which is defined as shown in Figure 5.5.

4. **Hide Value:** If the parameters within a BoP overview screen has a BoP data status as "Hide Value" then the HMI will hide the parameter along with its data. The following subsection defines the show/hide analogy associated with BoP overview within HMI:

   a) **Single Datapoints:** Each line entry can be shown or hidden within the BoP overview screens. A line entry includes the name of the parameter, and all content related to the datapoint (e.g., value, unit). If a line entry is to be hidden, subsequent line entries will move up to avoid empty entries.

   b) **Sections within BoP Overview Screens:** If all the line entries within a section are hidden, then the entire section will be hidden along with the section title. Subsequent sections will move up to avoid any empty screen area.

©2025 Caterpillar. All rights reserved.

Caterpillar: Confidential Green

c) **Menu Structure and Visible Screens:** If all line entries and sections within a BoP overview screen are hidden due to the current configuration of the system, the following applies:

- The submenu entry item within the Balance of Plant overview list will not be visible.
- A blank screen is never displayed. Therefore, it cannot be called with any navigation shortcut. If a screen is hidden, the arrow navigation buttons on the overview screens will not navigate to a hidden screen.
- In case there is no BoP supported, then the Balance of Plant entry in the overview navigation menu itself will not be available.

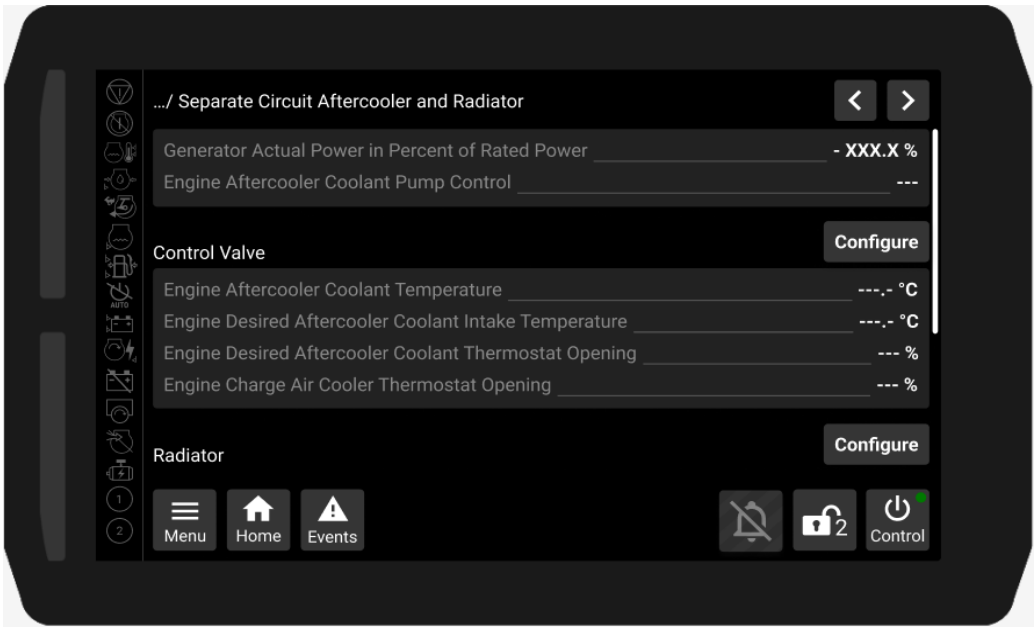

Figure 5.6 Separate Circuit Aftercooler and Radiator Overview Screen – Comms Loss/Boot up Behavior

Note: Reference [1] 'Generator Actual Power in Percent of Rated Power' in Figure 5.4 will always be valid and does not have a show/hide associated with it. show/hide of separate circuit aftercooler and radiator screen will be independent of this parameter and it will be hidden only if all other parameters on the screen are in the 'Hidden' state.

5.7.2 SCAC Configure Screen

The ET service tool is the primary source for the user to make adjustments to setpoints and configurable parameters which are stored on the paralleling controller. The HMI display is a secondary tool which provides the facility to adjust some of the important configurable parameters. The HMI display supports configuration of the following features from the configure submenu.

1. Paralleling
2. Generator Ratings
3. Load Control
4. Voltage Regulator
5. Reset Counters
6. Increase Hours
7. Real Time Clock
8. Automatic Mains Failure
9. Fuel Transfer
10. Annunciator Custom Events

©2025 Caterpillar. All rights reserved.

Caterpillar: Confidential Green

11. Programmable kW Relay Function
12. Transient Load Relief
13. Programmable Logic Feature
14. Ethernet
15. Ethernet Remote Display
16. SCADA Settings
17. Display Pairing Settings
18. Engine Management
19. Balance of Plant
20. Grid Code

Note: All the information related to HMI configuration screens are covered in the "Cat® ECS HMI Manual – Paralleling Genset Control" for both genset display and genset remote display. Refer to the above-mentioned document for more information. This document is intended to cover only configurable parameter information associated with Balance of Plant.

All of the configurable parameters associated with Balance of Plant are protected with either operator (level 1) or technician (level 2) security passwords. The user needs to enter the correct passwords in order to make any changes to parameters that are associated with security. Refer to "Security Level" – Preferences chapter of HMI manual to find details about the security level unlock procedure.

The configurable features in this document contain only unlocked version of screens for illustration purposes. See Figure 5.7 as an example for the locked version of a screen that is tied to security. Any parameter that required a password to unlock comes with a "lock symbol" and a security level number (either 1 or 2).

The associated radio buttons on the right side are initially inactive (with grey lines) and the user is not allowed to make any changes unless it is unlocked. Once the screen gets unlocked, the radio button becomes active, and the user can make changes.

If communication between the HMI and the controller fails partially or completely, the user must be able to recognize the following:

- The user may no longer see current values.
- Changes made by the user may not be received by the controller.

During the loss of communication, the user can click on all the static buttons (menu, home, events, alarm acknowledgement and security buttons) available on the screen. However, user cannot click on the controlling buttons or make selections that will require a write to the controller e.g. edit, reset, ok, enabled, disabled, refresh, ack all, reset all, enter, etc. controlling buttons should automatically be disabled once communication is lost and enabled when communication is re-established. During an active loss of comms event the HMI will not be able to write to the controller.

At the time of loss of communication user can still navigate to all the screens via main menu to update/modify the parameters that are stored locally on the HMI allowing for changes, e.g. IP Address settings on the off-package HMI, alarm acknowledge shall allow for silencing of the local HMI horn and high side driver, and general setting of languages, display Settings, screen saver settings, backlight saver settings, application Settings, security level (Edit and changing of passwords), file manager, etc. Refer to HMI Manual for more details about system behavior during loss of communication.

Note: The show/hide of the individual parameters / sections / menu / submenu on the configure screen will be similar to the BoP overview screens as mentioned in section 5.7.1.

©2025 Caterpillar. All rights reserved.

Caterpillar: Confidential Green

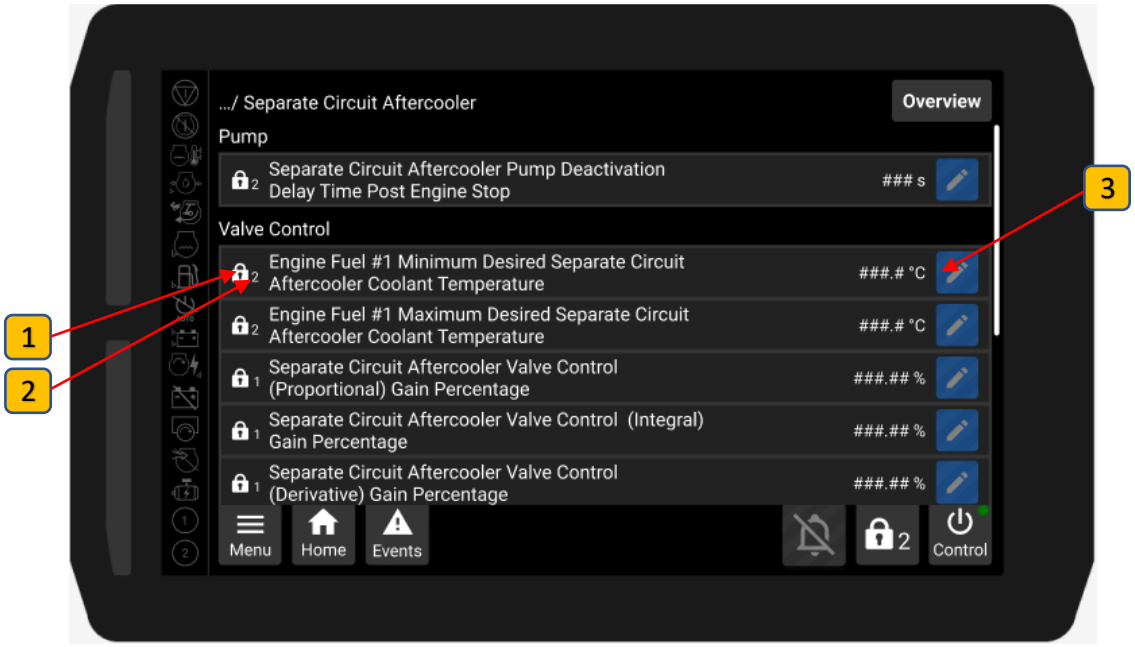

Figure 5.7 Example: Separate Circuit Aftercooler Configure Screen (When Locked)

1. Lock Button
2. Security Level (Can be level 1 or level 2)
3. Inactive State of Radio Button when the parameter is locked.

For most of the configurable parameters, the user needs to enter the numeric values. To enter numerical values for the parameters, the HMI display supports a standard keypad shown below (See Figure 5.8).

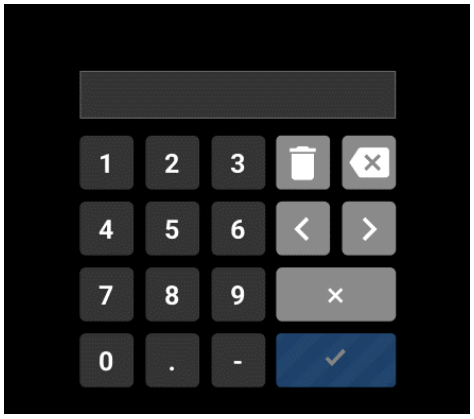

Figure 5.8 Standard Keypad (Inactive)

Initially the “Enter” button of the keypad is inactive. When the user enters the value that is within the specified ranges, the “Enter” button becomes active. See Figure 5.9 for reference. However, If the user enters a value that is out of range, then the “Enter” button of keypad will be disabled automatically until the valid value is entered (See Figure 5.10).

©2025 Caterpillar. All rights reserved.

Caterpillar: Confidential Green

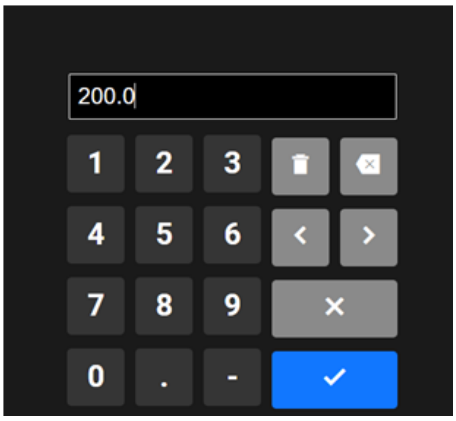

Figure 5.9 Standard Keypad (Entered Data is Valid)

Figure 5.10 Standard Keypad (Entered Data is Invalid)

The HMI has the ability to configure parameters associated with SCAC via the configuration screen. At the SCAC configure screen, the possible settings are displayed and can be updated. Initially, the user cannot change the write parameters since it is locked with level-1 (Operator) 'or' level-2 (Technician level) password.

Upon entering the level-1 and level-2 passwords by clicking on the "Lock" button available at the right-side bottom corner, the SCAC screen gets "Unlocked", and now the user allowed to update the values (See Figure 5.11).

To view and update the parameter values, the user can access the separate circuit aftercooler screen by navigating to:
Menu → Configure → Balance of Plant → Separate Circuit Aftercooler.

The controller supports the following configurable parameters relating to separate circuit aftercooler (3-way valve and pump control) as shown in Figure 5.11.

©2025 Caterpillar. All rights reserved.

Caterpillar: Confidential Green

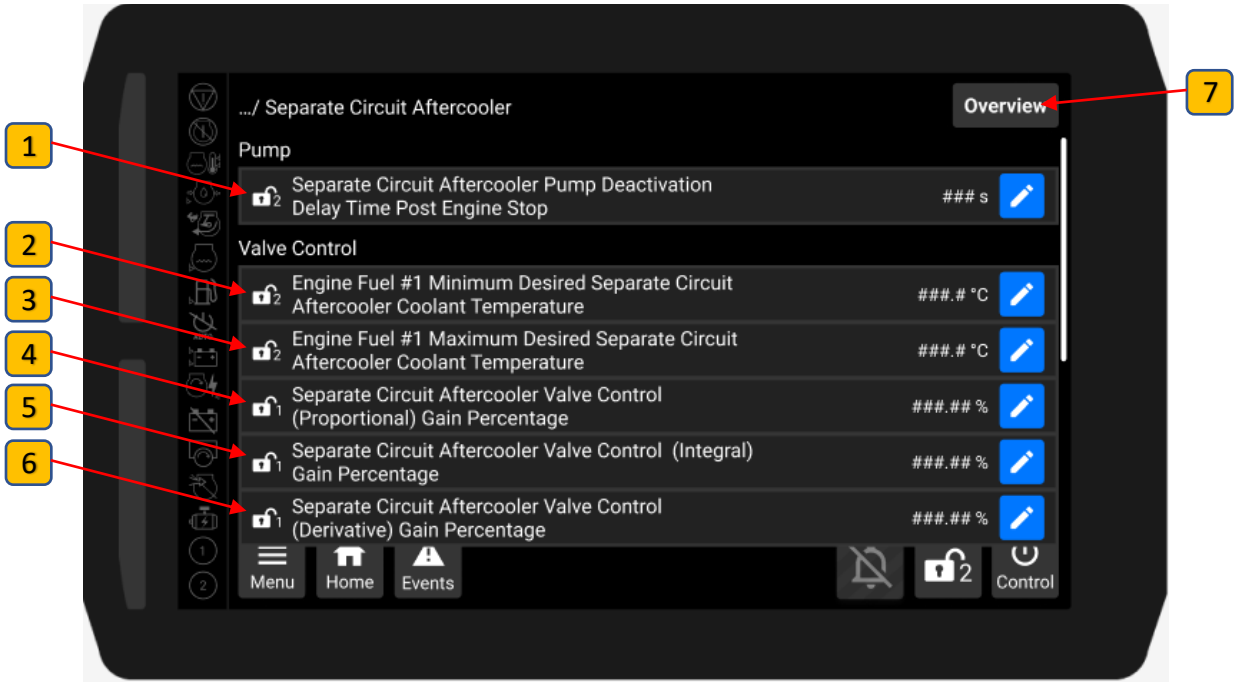

Figure 5.11 Separate Circuit Aftercooler Configure Screen

Figure 5.11 shows the separate circuit aftercooler configure screen. At the top right-side corner of the screen shortcut button is available to go to SCAC and radiator overview screen. The user needs to use scroll bar to view and edit the data.

Table 5.8 SCAC Configure Screen Parameters

Ref	Parameter Name	Unit	Access Level	Resolution	Range
1	Separate Circuit Aftercooler Pump Deactivation Delay Time Post Engine Stop	s	Level 2	1	0 to 3600 s
2	Engine Fuel #1 Minimum Desired Separate Circuit Aftercooler Coolant Temperature	°C	Level 2	0.1	0 - 200 °C
3	Engine Fuel #1 Maximum Desired Separate Circuit Aftercooler Coolant Temperature	°C	Level 2	0.1	0 - 200 °C
4	Separate Circuit Aftercooler Valve Control (Proportional) Gain Percentage	%	Level 1	0.01	0 to 100 %
5	Separate Circuit Aftercooler Valve Control (Integral) Gain Percentage	%	Level 1	0.01	0 to 100 %
6	Separate Circuit Aftercooler Valve Control (Derivative) Gain Percentage	%	Level 1	0.01	0 to 100 %
7	Shortcut to Separate Circuit Aftercooler and Radiator Overview Screen	-	-	-	-

Note: When the user selects the “Edit” button for each parameter it will pop-up a standard keypad as shown in Figure 5.8 to enter the desired value.

©2025 Caterpillar. All rights reserved.

Caterpillar: Confidential Green

6.0 Separate Circuit Aftercooler (Radiator Control)

6.1 Functional Description

The purpose of the low temperature cooling circuit radiator is to remove excess heat from the circuit to help maintain the correct inlet temperature for the Intercooler / SCAC circuit. The radiator circuit acts together with the regulation of the Intercooler / SCAC 3-way valve and pump. The goal for the radiator control is to regulate the radiator outlet temperature while minimizing the energy consumption required by the radiator. The system can be configured to control one of the following Radiator types:

- No Radiator Control
- Radiator with Frequency Control (VFD)
- Radiator with Single Speed Fans (using 1 to max. 8 stages)

Availability of a radiator is tied to the parameter “Separate Circuit Aftercooler Fan Control Output Type”.

6.1.1 Operational Logic

The control of the radiator in Intercooler / SCAC is activated and deactivated together with the control of the Intercooler / SCAC 3-way valve and pump.

Startup Phase:

- Genset start is initiated
    - Radiator Start Digital Output is Activated.

Warm-Up Phase:

- Radiator control (4-20mA) is controlled based on the radiator outlet temperature.

Normal Operation:

- Engine reaches optimal temperature.
- 3-way valve sends hot water to radiator.
- Radiator speed is regulated based on its Outlet Temperature (4-20mA).

Shutdown:

- Radiator outlet temperature regulation is stopped after the engine state has changed to “engine stopped” and “Separate Circuit Aftercooler Pump Deactivation Delay Time” has expired.

©2025 Caterpillar. All rights reserved.

Caterpillar: Confidential Green

6.1.2 Flow diagram: VFD or Single Speed Fan Radiator Control

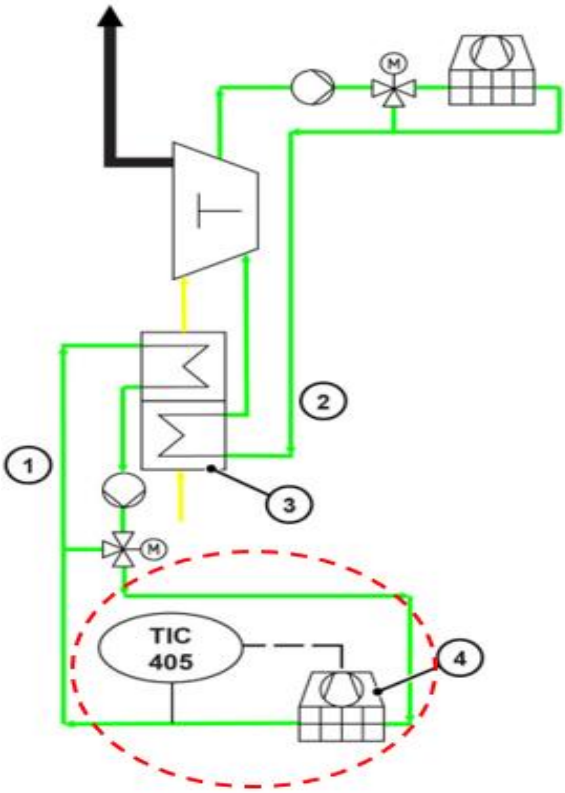

Figure 6.1 Flow Diagram - VFD or Single Speed Fan Radiator Control

1. Intercooler/SCAC low-temperature stage
2. Intercooler/SCAC high-temperature stage
3. Intercooler/SCAC
4. Radiator in Intercooler/SCAC

6.2 VFD Radiator Control

Purpose: In the case of radiators with frequency control, all fans are activated upon regulation activation. As cooling demands rise or fall, the fan speeds are adjusted accordingly using a speed control. The control algorithm for the VFD radiator utilizes a PID controller.

Control Strategy: The LT circuit controller continuously monitors the radiator outlet temperature. It compares the actual temperature to a predefined setpoint. A PID (Proportional-Integral-Derivative) control algorithm calculates the required valve position to minimize the temperature deviation.

VFD Radiator Operation:

- Fan Speed Controller Proportional Gain:
  - A value of 100% means that difference between actual water temperature and its setpoint of +/- 1°C leads to maximum or minimum fan speed, if both other parameters are set to 0%.

©2025 Caterpillar. All rights reserved.

Caterpillar: Confidential Green

- Fan Speed Controller Integral Gain:
  - A value of 100% means that an integral of the difference between actual water temperature and its setpoint of +/- 1°Cs leads to maximum or minimum fan speed, if both other parameters are set to 0%.
  - A difference of 1°C for 1 second causes maximum fan speed, when 100% integral gain is set.

- Fan Speed Controller Derivative Gain:
  - A value of 100% means that a derivative of the difference between actual water temperature and its setpoint of +/- 1°C/s leads to maximum or minimum fan speed, if both other parameters are set to 0%.
  - A rise of the difference of 1°C per second causes maximum fan speed, when 100% derivative gain is set.

Table 6.1 Radiator Speed Based on Output Signal

Output Signal	Radiator Speed
4 mA (0%)	Minimum Speed
20 mA (100%)	Maximum Speed

6.2.1 Enable/Disable

The enable/disable input activates regulation calculation and sends an enable signal to the VFD controller, which activates the fans for as long as the controller is required.

6.2.2 Temperature Setpoint Calculation

The temperature setpoint for the radiator outlet temperature depends on the current engine power, expressed as a percentage of the rated power. The setpoint is constantly updated based on linear interpolation between two temperature setpoints: Max at 40% of the rated engine power and Min at 100% of the rated engine power. Setpoints outside the interval between 40% and 100% of the rated power remain fixed at their respective min and max values. The graph below provides an example of the curve.

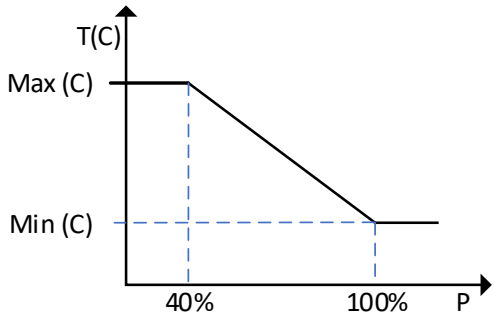

Figure 6.2 Temperature Setpoint Calculation Curve – Radiator Control

While operating in active island mode, a constant setpoint is applied using the temperature setpoint input at 100% engine power for the active gas type.

©2025 Caterpillar. All rights reserved.

Caterpillar: Confidential Green

6.2.3 PID Controller

The PID controller accurately adjusts and controls the radiator's responsiveness to match the desired outlet temperature setpoint. The PID controller has three configurable setpoints for proportional gain, integral gain, and derivative gain, and should incorporate anti-windup protection to prevent integral windup.

The output of the PID Loop should be a value that can drive a configurable 4-20 mA output (0%-100%) to adjust fan speed. (Default: 4 mA - 0%, 20 mA - 100%)

6.3 Staged Radiator Control (Single Speed Fans)

In the case of a staged radiator, several fans are grouped together into one cooler stage and operated at a constant speed. Cooler stage 1 is activated upon regulation activation. As cooling demands rise or fall, cooler stages are activated or deactivated one after the other. The requested cooling capacity can be expressed as "cooling level", synonymous with the "number of requested cooler stages".

The maximum available level is limited by the configured number of available cooler stages and the algorithm to activate/deactivate the next cooler stage.

Purpose: In systems equipped with single-speed radiator fans, staged control is used to match cooling output to system demand while maintaining energy efficiency. Fans are grouped into stages, each operating at a constant speed.

Control Strategy:

- Cooler stages consist of one or more fans grouped together.
- Each stage operates at full speed when activated.
- Stage 1 is activated immediately upon regulation activation.
- As cooling demand increases, additional stages are activated sequentially.
- As demand decreases, stages are deactivated in reverse order.

Staged Radiator Operation: To prevent unnecessary or rapid switching of radiator fan stages due to short-term temperature fluctuations, the system uses two configurable timing parameters:

- Reaction Delay Time
- Stabilization Time

“SCAC Fan Control Reaction Delay Time” introduces a delay before activating or deactivating fan stages. It starts when the temperature difference between the actual and desired radiator outlet coolant temperature exceeds a defined threshold. The reaction delay time filters out short-term temperature increase/decrease which prevents rapid fan stage changes.

“SCAC Fan Control Stabilization Time” defines a minimum time interval between successive fan stage changes in the same direction (either activation or deactivation). This prevents frequent toggling of fan stages, allowing the system to stabilize before making further adjustments.

The control algorithm for the radiator to activate and deactivate the stages is shown in the following block diagram.

©2025 Caterpillar. All rights reserved.

Caterpillar: Confidential Green

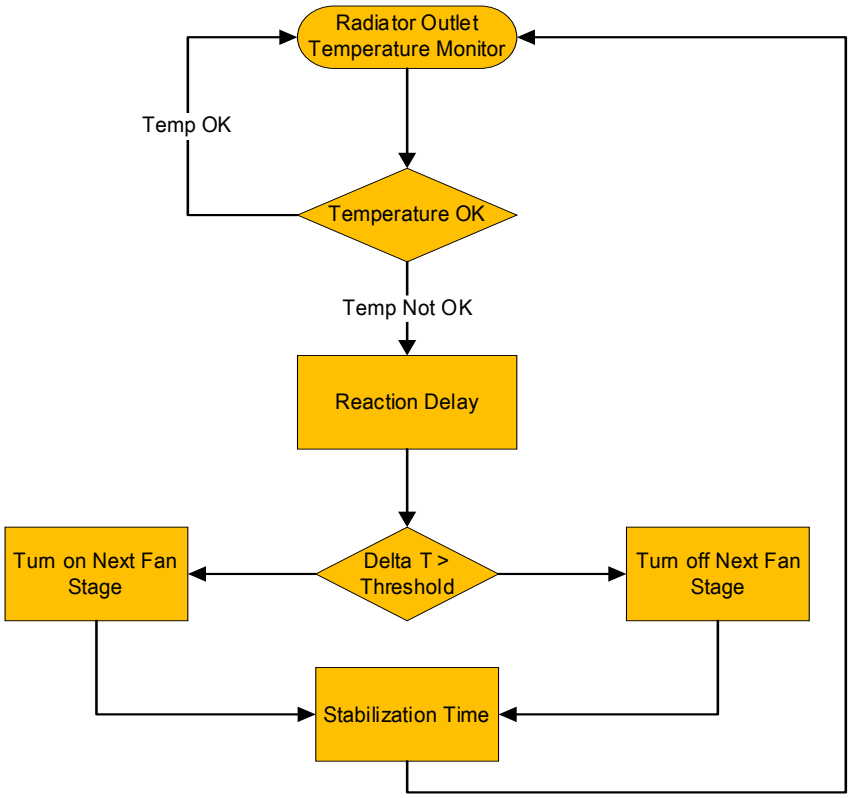

Figure 6.3 Staged Radiator Control Algorithm

6.3.2 Temperature Setpoint Calculation

The temperature setpoint for the outlet temperature at the radiator depends on the current power of the engine, expressed as a percentage of the rated power. The setpoint is constantly updated based on linear interpolation between the two temperature setpoints *Max* at 40% of the rated engine power and *Min* at 100% of the rated engine power. The setpoints outside the interval between 40 % and 100 % of the rated power remain fixed at their respective Min and Max values. The graph below provides an example of the curve.

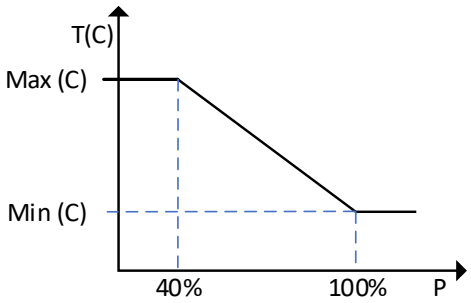

Figure 6.4 Temperature Setpoint Calculation Curve – Staged Radiator Control

©2025 Caterpillar. All rights reserved.

Caterpillar: Confidential Green

6.4 Control Setpoints

This subsection contains the complete collection of function-related parameters required to set-up and tune the control. The SCAC radiator control has 3 sets of setpoints listed below:

1. General Radiator Setpoints
2. VFD Controlled Radiator Setpoints
3. Staged Radiator Setpoints (Single Speed Fans)

Table 6.2 SCAC General Radiator Setpoints

Parameter	Resolution	Unit	Range / Status
Separate Circuit Aftercooler Fan Control Output Type	-	-	Not Installed On/Off 4 to 20 mA
Engine Fuel #1 Minimum Desired Separate Circuit Aftercooler Radiator Outlet Temperature	0.1	°C	[0,200]
Engine Fuel #1 Maximum Desired Separate Circuit Aftercooler Radiator Outlet Temperature	0.1	°C	[0,200]
Engine Radiator #2 Control Temperature Minimum Input Value	0.1	°C	[0,200]
Engine Radiator #2 Control Temperature Maximum Input Value	0.1	°C	[0,200]

Separate Circuit Aftercooler Fan Control Output Type

Used to read and program the type of fan control for the Separate Circuit Aftercooler Radiator. "4-20mA" = Analog speed control of the fan. "On/Off" = Digital Outputs turn On/Off individual fans.

Engine Fuel #1 Minimum Desired Separate Circuit Aftercooler Radiator Outlet Temperature

Used to read and program the minimum desired coolant temperature at the outlet of the Separate Circuit Aftercooler Radiator for Engine Fuel #1.

Engine Fuel #1 Maximum Desired Separate Circuit Aftercooler Radiator Outlet Temperature

Used to read and program the maximum desired coolant temperature at the outlet of the Separate Circuit Radiator Aftercooler for Engine Fuel #1.

Engine Radiator #2 Control Temperature Minimum Input Value

Used to read and program the Engine Radiator #2 Control Temperature that corresponds to the minimum input value. (Reference SPN 20821 Engine Radiator 2 Control Temperature). For example, for a current loop sensor, the minimum input value is the value to be used when the sensor is outputting 4mA.

Engine Radiator #2 Control Temperature Maximum Input Value

sed to read and program the Engine Radiator #2 Control Temperature that corresponds to the maximum input value. (Reference SPN 20821 Engine Radiator 2 Control Temperature). For example, for a current loop sensor, the maximum input value is the value to be used when the sensor is outputting 20mA.

©2025 Caterpillar. All rights reserved.

Caterpillar: Confidential Green

Table 6.3 SCAC VFD Controlled Radiator Setpoints

Parameter	Resolution	Unit	Range / Status
Separate Circuit Aftercooler Fan Speed (Proportional) Gain Percentage	0.01	%	[0,100]
Separate Circuit Aftercooler Fan Speed (Integral) Gain Percentage	0.01	%	[0,100]
Separate Circuit Aftercooler Fan Speed (Derivative) Gain Percentage	0.01	%	[0,100]

Separate Circuit Aftercooler Fan Speed (Proportional) Gain Percentage
Used to read and program the proportional gain for a PID controller used to control the separate circuit aftercooler fan speed as an absolute percentage of factory set proportional gain.

A value of 100% means that difference between actual water temperature and its setpoint of +/- 1°C leads to maximum or minimum fan speed, if both other parameters are set to 0%.

Separate Circuit Aftercooler Fan Speed (Integral) Gain Percentage
Used to read and program the integral gain for a PID controller used to control the separate circuit aftercooler fan speed as an absolute percentage of factory set integral gain.

A value of 100% means that an integral of the difference between actual water temperature and its setpoint of +/- 1°Cs leads to maximum or minimum fan speed, if both other parameters are set to 0%.

Separate Circuit Aftercooler Fan Speed (Derivative) Gain Percentage
Used to read and program the derivative gain for a PID controller used to control the separate circuit aftercooler fan speed as an absolute percentage of factory set derivative gain.

A value of 100% means that a derivate of the difference between actual water temperature and its setpoint of +/- 1°C/s leads to maximum or minimum fan speed, if both other parameters are set to 0%.

Table 6.4 SCAC Staged Radiator Setpoints (Single Speed Fans)

Parameter	Resolution	Unit	Range / Status
Number of Separate Circuit Aftercooler Fans	1	-	[1, 8]
Separate Circuit Aftercooler Fan Control Stabilization Time	1	Sec	[0,60]
Separate Circuit Aftercooler Fan Control Coolant Temperature Deviation Reaction Delay Time	1	Sec	[0, 10]
Separate Circuit Aftercooler Fan Control Coolant Temperature Deviation Threshold	0.1	°C	[1, 10]

Number of Separate Circuit Aftercooler Fans
Used to read and program the number of fans on the separate circuit aftercooler radiator.

Separate Circuit Aftercooler Fan Control Stabilization Time
Used to read and program the stabilization time for the separate circuit aftercooler fan control. This is the amount of time after the activation or deactivation of a separate circuit aftercooler fan before any other fan control changes can occur.

©2025 Caterpillar. All rights reserved.

Caterpillar: Confidential Green

Separate Circuit Aftercooler Fan Control Coolant Temperature Deviation Reaction Delay Time
Used to read and program the reaction delay time for separate circuit aftercooler fan control. This is the amount of time the absolute temperature difference between the Actual and Desired Separate Circuit Aftercooler Radiator outlet coolant temperatures is greater than the threshold before the control will consider the temperature to be out of range.

Separate Circuit Aftercooler Fan Control Coolant Temperature Deviation Threshold
Used to read and program the temperature difference threshold between actual and desired Separate Circuit Aftercooler Radiator outlet coolant temperatures. When the temperature difference is greater than the threshold, the control will consider the temperature to be out of range.

6.5 Diagnostics and Feedback

6.5.1 Diagnostics
The following table defines the diagnostics events associated with this feature:

Table 6.5 SCAC Radiator Control Diagnostics Events

SPN	FMI	Name	ERC	Description	Delay	Pre-Condition Delay
20821	1	Engine Radiator 2 Control Temperature	Soft Shutdown	Engine Radiator 2 Control Temperature sensor error (current/signal level below normal range)	300s	0s
20821	0	Engine Radiator 2 Control Temperature	Soft Shutdown	Engine Radiator 2 Control Temperature sensor error (current/signal level above normal range)	300s	0s
20821	18	Engine Radiator 2 Control Temperature	Warning	Engine Radiator 2 Control Temperature sensor error (current/signal level below normal range)	500ms	0s
20821	16	Engine Radiator 2 Control Temperature	Warning	Engine Radiator 2 Control Temperature sensor error (current/signal level above normal range)	500ms	0s
20821	7	Engine Radiator 2 Control Temperature	Soft Shutdown	Engine Radiator 2 Control Temperature sensor is missing (not responding properly / no sensor value due to IO-terminal error)	300s	0s
20821	12	Engine Radiator 2 Control Temperature	Warning	Engine Radiator 2 Control Temperature sensor error (not responding properly / no sensor value due to IO-terminal error)	500ms	0s
21158	0	Engine Radiator 2	Soft Shutdown	Engine Radiator 2 Failure	300s	0s
21158	12	Engine Radiator 2	Warning	Engine Radiator 2 Failure	0s	0s

6.5.2 Status Events
The following tables defines the status events associated with this feature:

©2025 Caterpillar. All rights reserved.

Caterpillar: Confidential Green

Table 6.6 SCAC VFD controlled radiator Status Events

Name	Description	Delay	Pre-Condition Delay
Separate Circuit Aftercooler Radiator Fan Enable Command Activated	The enable command, that controls the radiator fan for the separate circuit aftercooler, has been activated.	0s	0s
Separate Circuit Aftercooler Radiator Fan Enable Command Deactivated	The enable command, that controls the radiator fan for the separate circuit aftercooler, has been deactivated.	0s	0s

Table 6.7 SCAC Radiator with single speed fans Controlled Status Events

Name	Description	Delay	Pre-Condition Delay
Engine Radiator #2 Fan #1 Enable Command Activated	The enable command of the Engine Radiator #2 Fan group #1 has been set to active.	0s	0s
Engine Radiator #2 Fan #1 Enable Command Deactivated	The enable command of the Engine Radiator #2 Fan group #1 has been deactivated.	0s	0s
Engine Radiator #2 Fan #2 Enable Command Activated	The enable command of the Engine Radiator #2 Fan group #2 has been set to active.	0s	0s
Engine Radiator #2 Fan #2 Enable Command Deactivated	The enable command of the Engine Radiator #2 Fan group #2 has been deactivated.	0s	0s
Engine Radiator #2 Fan #3 Enable Command Activated	The enable command of the Engine Radiator #2 Fan group #3 has been set to active.	0s	0s
Engine Radiator #2 Fan #3 Enable Command Deactivated	The enable command of the Engine Radiator #2 Fan group #3 has been deactivated.	0s	0s
Engine Radiator #2 Fan #4 Enable Command Activated	The enable command of the Engine Radiator #2 Fan group #4 has been set to active.	0s	0s
Engine Radiator #2 Fan #4 Enable Command Deactivated	The enable command of the Engine Radiator #2 Fan group #4 has been deactivated.	0s	0s
Engine Radiator #2 Fan #5 Enable Command Activated	The enable command of the Engine Radiator #2 Fan group #5 has been set to active.	0s	0s
Engine Radiator #2 Fan #5 Enable Command Deactivated	The enable command of the Engine Radiator #2 Fan group #5 has been deactivated.	0s	0s
Engine Radiator #2 Fan #6 Enable Command Activated	The enable command of the Engine Radiator #2 Fan group #6 has been set to active.	0s	0s
Engine Radiator #2 Fan #6 Enable Command Deactivated	The enable command of the Engine Radiator #2 Fan group #6 has been deactivated.	0s	0s
Engine Radiator #2 Fan #7 Enable Command Activated	The enable command of the Engine Radiator #2 Fan group #7 has been set to active.	0s	0s
Engine Radiator #2 Fan #7 Enable Command Deactivated	The enable command of the Engine Radiator #2 Fan group #7 has been deactivated.	0s	0s
Engine Radiator #2 Fan #8 Enable Command Activated	The enable command of the Engine Radiator #2 Fan group #8 has been set to active.	0s	0s
Engine Radiator #2 Fan #8 Enable Command Deactivated	The enable command of the Engine Radiator #2 Fan group #8 has been deactivated.	0s	0s

6.5.3 Data Feedback

The following tables defines the data feedback associated with this feature:

©2025 Caterpillar. All rights reserved.

Caterpillar: Confidential Green

Table 6.8 SCAC General Radiator Data Feedback

SPN	Name	Description	Unit
20821	Engine Radiator 2 Control Temperature	Temperature measured and reported by the device. It may be used for direct or remote (by another controller) control of the Fan 2. For example, this may be the temperature of the fluid flowing through the Fan 2, or some other temperature relating to the F	°C
20822	Desired Engine Radiator 2 Control Temperature	Indicates the desired temperature of the temperature used to control the fan speed.	°C

Table 6.9 VFD Controlled Radiator Data Feedback

SPN	Name	Description	Unit
6730	Engine Fan 2 Requested Percent Speed	Fan speed of the second will use 0% to 100%.	%

Table 6.10 Radiator With Single Speed Fans Data Feedback

SPN	Name	Description	Unit
20823	Engine Radiator 2 Fan 1 Status	Status of electrically operated cooling Radiator 2 Fan# 1 on an engine.	Inactive Active
20824	Engine Radiator 2 Fan 2 Status	Status of electrically operated cooling Radiator 2 Fan# 2 on an engine.	Inactive Active
20825	Engine Radiator 2 Fan 3 Status	Status of electrically operated cooling Radiator 2 Fan# 3 on an engine.	Inactive Active
20826	Engine Radiator 2 Fan 4 Status	Status of electrically operated cooling Radiator 2 Fan# 4 on an engine.	Inactive Active
20827	Engine Radiator 2 Fan 5 Status	Status of electrically operated cooling Radiator 2 Fan# 5 on an engine.	Inactive Active
20828	Engine Radiator 2 Fan 6 Status	Status of electrically operated cooling Radiator 2 Fan# 6 on an engine.	Inactive Active
20829	Engine Radiator 2 Fan 7 Status	Status of electrically operated cooling Radiator 2 Fan# 7 on an engine.	Inactive Active
20830	Engine Radiator 2 Fan 8 Status	Status of electrically operated cooling Radiator 2 Fan# 8 on an engine.	Inactive Active

6.6 Input and Outputs

The following table defines the hardware IO signals required for SCAC radiator control.

Table 6.11 SCAC Radiator Control I/O Signals

Descriptive Name	Status	DI	DO	AI (4-20mA)	AO (4-20mA)
Engine Radiator 2 Control Temperature	Configurable			X	
Engine Radiator 2 VFD Start signal	24V = On		X		
Engine Radiator 2 Failed Indicator	Open = Fault	X			
Engine Radiator 2 VFD Control	0-100%				X

©2025 Caterpillar. All rights reserved.

Caterpillar: Confidential Green

Descriptive name	Status	DI	DO	AI (4-20mA)	AO (4-20mA)
Engine Radiator 2 Fan group 1	24V = On		X		
Engine Radiator 2 Fan group 2	24V = On		X		
Engine Radiator 2 Fan group 3	24V = On		X		
Engine Radiator 2 Fan group 4	24V = On		X		
Engine Radiator 2 Fan group 5	24V = On		X		
Engine Radiator 2 Fan group 6	24V = On		X		
Engine Radiator 2 Fan group 7	24V = On		X		
Engine Radiator 2 Fan group 8	24V = On		X		

6.7 HMI Display Requirements/Concepts

The controller supports the following visualizations relating to separate circuit aftercooler (Radiator Control).

6.7.1 SCAC Radiator Control Overview Parameters

The SCAC valve control and radiator control overview parameters are placed in a single screen. The following image highlights the parameters associated with SCAC radiator control. Refer to section 5.7.1 “SCAC Valve Control Overview Parameters” to find other information related to separate circuit aftercooler and radiator screen. This section defines the valid ranges and parameters associated with SCAC radiator control only.

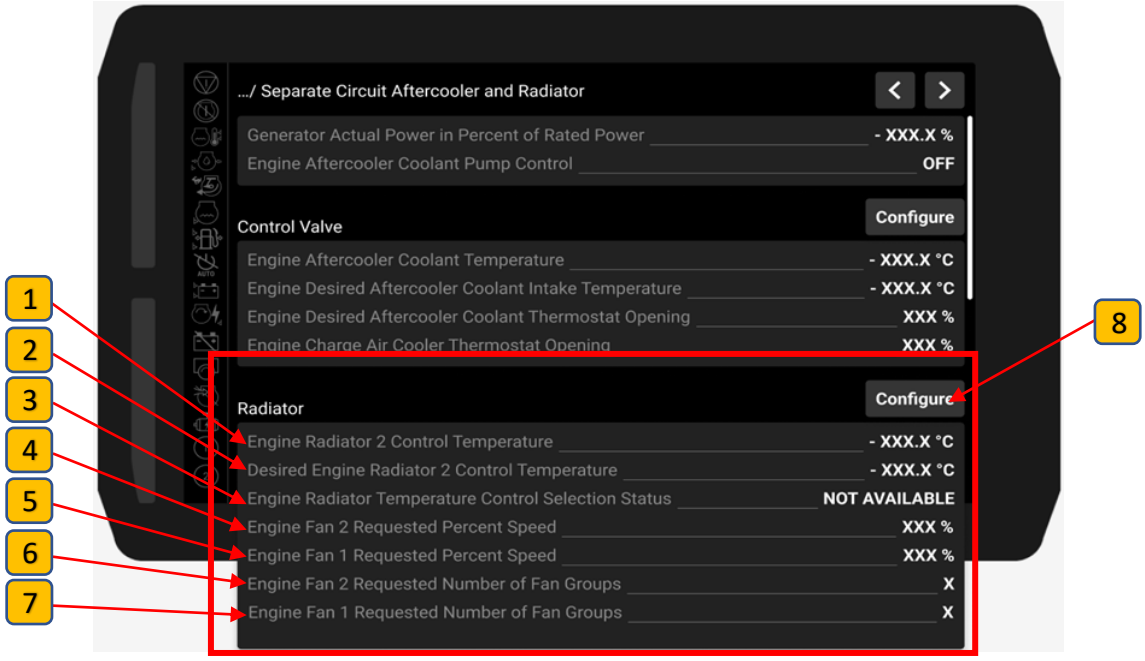

Figure 6.5 Separate Circuit Aftercooler and Radiator Overview Screen – Radiator Control Section

Figure 6.5 shows the separate circuit aftercooler and radiator overview screen. Here as well the overview section of radiator control is directly related to radiator control configure screen (See Reference [8]). The user needs to use scroll bar to see all the data available in the separate circuit aftercooler and radiator overview screen.

©2025 Caterpillar. All rights reserved.

Caterpillar: Confidential Green

Table 6.12 SCAC and Radiator Overview Screen – Radiator Control Parameters

Ref	Parameter Name	Unit	Valid Data Range
1	Engine Radiator 2 Control Temperature	°C	-273 to 1735 °C
2	Desired Engine Radiator 2 Control Temperature	°C	-273 to 1735 °C
3	Engine Radiator Temperature Control Selection Status	-	Engine Radiator 1 Control Temperature Engine Radiator 2 Control Temperature Error Not Available
4	Engine Fan 2 Requested Percent Speed	%	0 to 100%
5	Engine Fan 1 Requested Percent Speed	%	0 to 100%
6	Engine Fan 2 Requested Number of Fan Groups	-	0 to 65535
7	Engine Fan 1 Requested Number of Fan Groups	-	0 to 65535
8	Shortcut to Separate Circuit Aftercooler Radiator Configure Screen	-	-

Note: The show/hide rules for this section of parameters will remain same as mentioned in the section 5.7.1 “SCAC Valve Control Overview Parameters”. Hence it is not explicitly explained in this section.

6.7.2 SCAC Radiator Configure Screen

The HMI has the ability to configure parameters associated with SCAC radiator via the configuration screen. At the SCAC configure screen, the possible settings are being displayed and can be updated. Initially, the user cannot change the write parameters since it is locked with level-1 (Operator) ‘or’ level-2 (Technician level) password. Upon entering the level-1 and level-2 passwords by clicking on the “Lock” button available at the right-side bottom corner, the SCAC radiator screen gets “Unlocked”, and now the user allowed to update the values (See Figure 6.6).

To view and update the parameter values, the user can access the separate circuit aftercooler radiator screen by navigating to:
Menu → Configure → Balance of Plant → Separate Circuit Aftercooler Radiator.

The controller supports the following configurable parameters relating to separate circuit aftercooler (Radiator Control) as shown in Figure 6.6.

©2025 Caterpillar. All rights reserved.

Caterpillar: Confidential Green

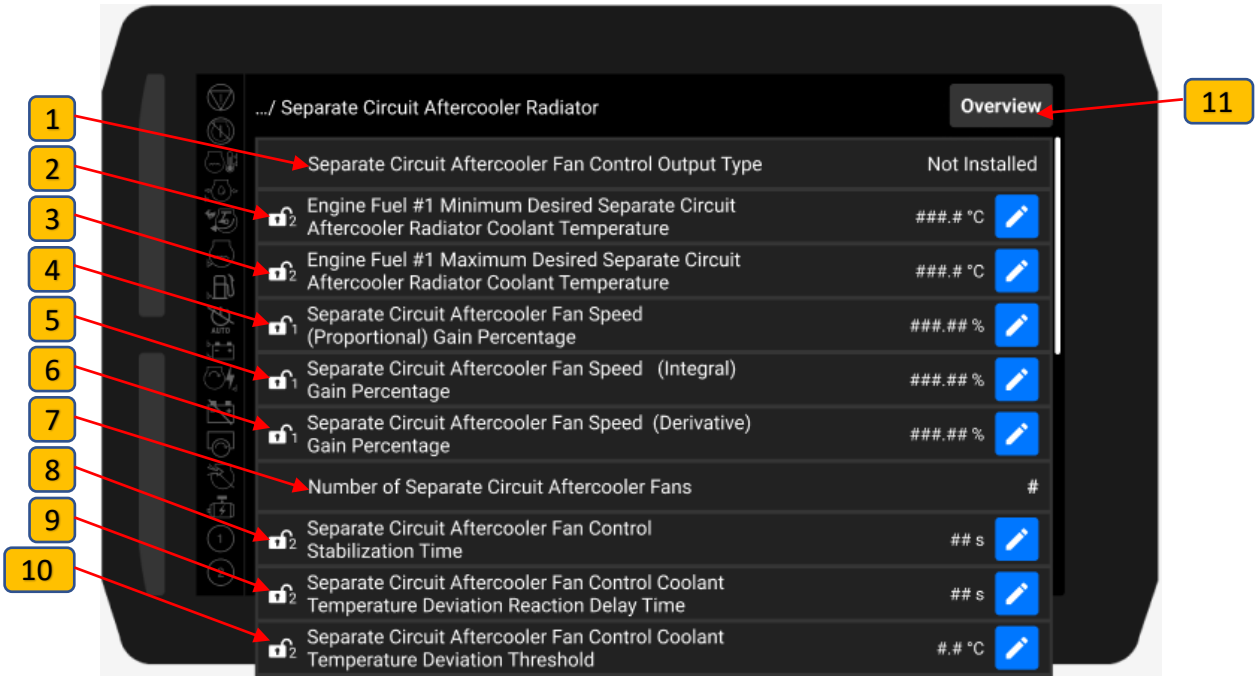

Figure 6.6 Separate Circuit Aftercooler Radiator Configure Screen

Figure 6.6 shows the separate circuit aftercooler radiator configure screen. At the top right-side corner of the screen shortcut button is available to go to SCAC and radiator overview screen. The user needs to use scroll bar to view and edit all the data.

Table 6.13 SCAC Radiator Configure Screen Parameters

Ref	Parameter Name	Unit	Access Level	Resolution	Range
1	Separate Circuit Aftercooler Fan Control Output Type	-	Observer	Not Installed On/Off 4 to 20 mA	-
2	Engine Fuel #1 Minimum Desired Separate Circuit Aftercooler Radiator Outlet Temperature	°C	Level 2	0.1	0 – 200 °C
3	Engine Fuel #1 Maximum Desired Separate Circuit Aftercooler Radiator Outlet Temperature	°C	Level 2	0.1	0 - 200 °C
4	Separate Circuit Aftercooler Fan Speed (Proportional) Gain Percentage	%	Level 1	0.01	0 to 1000 %
5	Separate Circuit Aftercooler Fan Speed (Integral) Gain Percentage	%	Level 1	0.01	0 to 1000 %
6	Separate Circuit Aftercooler Fan Speed (Derivative) Gain Percentage	%	Level 1	0.01	0 to 1000 %
7	Number of Separate Circuit Aftercooler Fans	-	Observer	1	2 - 8
8	Separate Circuit Aftercooler Fan Control Stabilization Time	s	Level 2	1	0 to 60 sec

©2025 Caterpillar. All rights reserved.

Caterpillar: Confidential Green

Ref	Parameter Name	Unit	Access Level	Resolution	Range
9	Separate Circuit Aftercooler Fan Control Coolant Temperature Deviation Reaction Delay Time	s	Level 2	1	0 to 10 sec
10	Separate Circuit Aftercooler Fan Control Coolant Temperature Deviation Threshold	°C	Level 2	0.1	1 -10 °C
11	Shortcut to Separate Circuit Aftercooler and Radiator Overview Screen	-	-	-	-

Note: When the user selects the “Edit” button it will pop-up a standard keypad as shown in Figure 5.8 to enter the desired value.

©2025 Caterpillar. All rights reserved.

Caterpillar: Confidential Green

7.0 Engine Cooling Circuit (3-Way Valve & Pump Control)

7.1 Functional Description

The Purpose of the engine cooling circuit regulation is to regulate the temperature of the coolant at the engine inlet/outlet of the engine to a setpoint value according to a configurable characteristic curve. In a power only configuration, the heat from the engine circuit is diverted to the engine circuit radiator where it is removed. In a hot water CHP configuration, any excess heat that is not used by the customer heating circuit is diverted to the engine circuit radiator often referred to as the emergency cooling circuit.

Depending on the engine and application (mechanical/electrical pumps & 3-way valve, etc) there are several possible configurations available to ensure cooling of the engine based on the key components 3-way valve, pump and a device to remove excess heat (e.g. radiator, heat exchanger).

1. **No 3-Way valve Control:** For generator sets with mechanical thermostats and engine mounted pumps the control needs to be disabled.
2. **3-Way valve Control:** The 3-Way valve either in power only or CHP scenario (for details see section "Flow diagrams") is used to increase/decrease the return temperature at the inlet of the engine to the required setpoint by mixing cooler proportions of the coolant originating, e.g., either from a radiator or the customer-side heating circuit (with or without exhaust gas heat exchanger).

Common to all configuration options to regulate the return temperature in the engine cooling circuit is a pump control within the engine cooling circuit (main pump) and 3-way valve regulation. If there is a customer site heating circuit, the extended scenario "Emergency Cooling Circuit" applies, in which a second pump control is added.

7.1.1 Operational Logic

7.1.1.1 Genset in Power Only Operation (No CHP)

The heat from the engine circuit is diverted to the engine circuit radiator from where it is removed. Refer to Figure 7.1.

Startup Phase:

- Genset start is initiated
  - Engine Pump and valve regulation is started
  - 3-way valve bypasses radiator.
  - Pump circulates coolant through engine only.

Warm-Up Phase:

- Temperature rises.
- Valve begins to mix flow between bypass and radiator.
- Engine Pump maintains flow rate.

Normal Operation:

- Engine reaches optimal temperature.
- Valve maintains setpoint temperature.

©2025 Caterpillar. All rights reserved.

Caterpillar: Confidential Green

- Pump maintains steady flow.

Shutdown:

- Engine Pump and valve regulation is stopped after the engine state has changed to “engine stopped” and “Engine Coolant Pump Deactivation Delay Time Post Engine Stop” has expired.

7.1.1.2 Genset With CHP

A 3-way valve is located as an emergency cooling circuit and when the when a heating circuit is installed, the optional secondary pump and the 3-way valve regulation is embedded in a cascaded regulation with the heating circuit control. The 3-way valve acts as the primary engine temperature control and the emergency cooling circuit as fallback to ensure engine cooling. Refer to Figure 7.2 (a) and (b).

Startup Phase:

- Genset start is initiated
  - Engine Pump and 3-way valve regulation is started
  - Heating circuit 3-way valve bypasses radiator.
  - Pump circulates coolant through engine only.

Warm-Up Phase:

- Temperature rises.
- Heating circuit 3-way Valve opens.
- Engine Pump maintains flow rate.
- Heating circuit 3-way Valve opens to 100%. Cat ECS Controller receives Digital Input that valve is fully open.
- Secondary Pump (Optional) and regulation of the 3-Way valve in the engine cooling circuit starts to provide additional cooling by the radiator as needed.

Normal Operation:

- Engine reaches optimal temperature.
- 3-Way valve maintains setpoint temperature.
- Pumps maintains steady flow.
- If the Actual position of the engine cooling 3-Way valve has returned to or still is at 0 % AND the cooling demand decreases further, i.e. the engine cooling circuit temperature needs to increase. Regulation of the engine cooling valve is stopped. The secondary pump follow-up delay timer, fixed at 60 seconds, is started. The secondary pump is stopped after the delay timer has expired. Any reactivation of the secondary regulation resets the delay timer.

Shutdown:

- Engine Pump and 3-way valve regulation is stopped after the engine state has changed to “engine stopped” and “Separate Circuit Aftercooler Pump Deactivation Delay Time” has expired.
- The secondary pump should be stopped after the engine state has changed to “engine stopped” and aftercooling time has expired (aftercooling time due to parameter “Engine Coolant Pump #2 Deactivation Delay Time Post Engine Stop”.

©2025 Caterpillar. All rights reserved.

Caterpillar: Confidential Green

7.1.2 Flow Diagram: Sample Configurations of The Engine Cooling Circuit

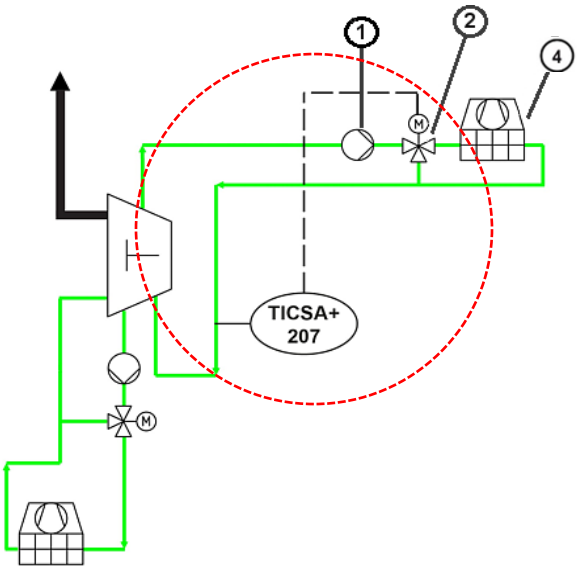

Figure 7.1 Engine Cooling Circuit (3-Way Valve & Pump Control) – Without CHP

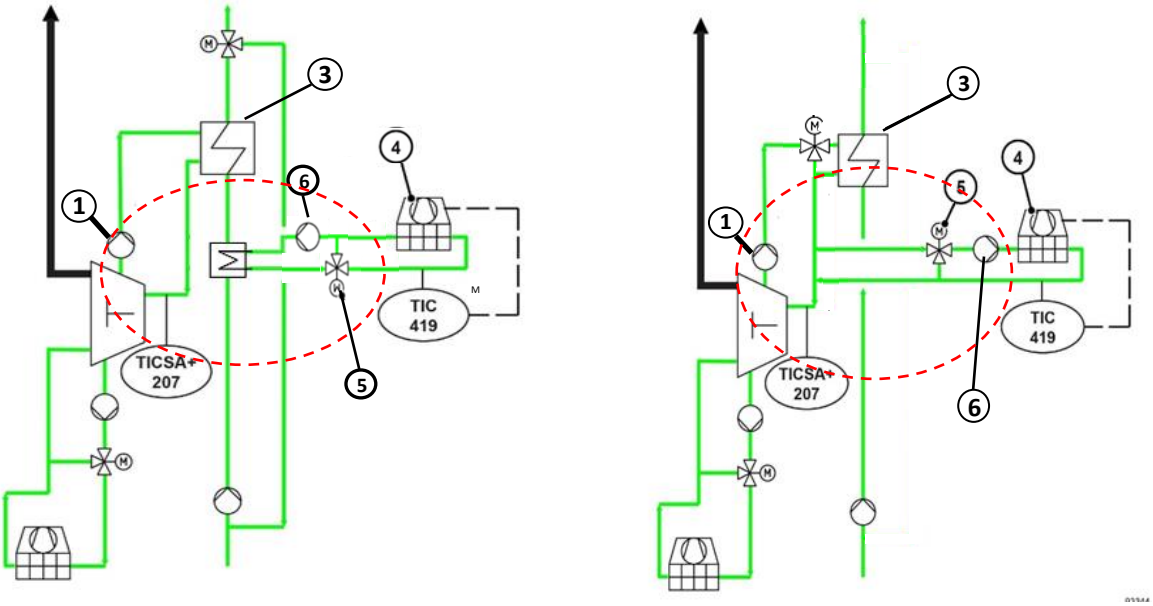

(a) **(b)**

Figure 7.2 Engine Cooling Circuit (3-Way Valve & Pump Control) – With CHP

1. (Primary) Pump within engine cooling circuit / jacket cooling water system (JWC)
2. 3-Way Valve within engine cooling circuit
3. Heat exchanger for coupling a customer heating circuit
4. Radiator within engine cooling circuit in power only scenario (Figure 7.1), within emergency cooling circuit for CHP - Figure 7.2 (a) and (b).

©2025 Caterpillar. All rights reserved.

Caterpillar: Confidential Green

5. 3-Way valve which is located either within the primary engine cooling circuit (JWC) (for power only); or for CHP within the emergency cooling circuit which itself is either located in the heating circuit - Figure 7.2 (a); or in the engine cooling circuit - Figure 7.2 (b)
6. Secondary pump within the emergency cooling circuit.

7.2 3-Way Valve Control

The inlet/outlet temperature of the engine coolant is regulated according to a configurable load-dependent characteristic. The controller adjusts the 3-way valve according to the deviation between the actual temperature and the setpoint as follows:

- Setpoint > actual temperature: mix in less from the colder coolant by moving the 3-way valve output towards position 0 %
- Setpoint < actual temperature: mix in more from the colder coolant by moving the 3-way valve output towards position 100 %
- Setpoint = actual temperature: Nothing to do, keep position.

The position of this valve type is set and held by a 4-20mA setpoint directly. Therefore, the output of the PID controller (0 – 100%) can be connected directly to the valve via a 4-20mA output. (Default: 4mA: 0%, 20mA: 100%).

7.2.1 Temperature Setpoint Calculation

The temperature setpoint depends on the current power of the engine, expressed as a percentage of the rated power. The setpoint is constantly updated based on linear interpolation between the two temperature setpoints *Max* at 40% of the rated engine power and *Min* at 100% of the rated engine power. The setpoints outside the interval between 40 % and 100 % of the rated power remain fixed at their respective Min and Max values. The graph below provides an example of the curve.

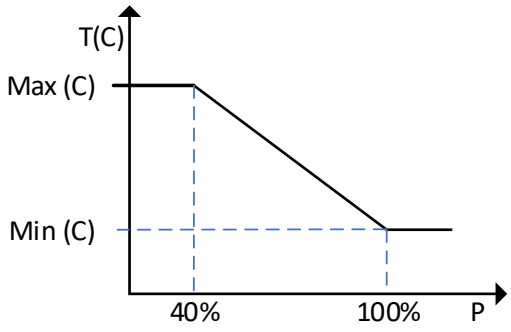

Figure 7.3 Temperature Setpoint Calculation Curve – 3 Way Valve Control (Engine Cooling Circuit)

While operating in active island mode a constant setpoint is applied, using the temperature setpoint input at 100% engine power for the active gas type.

7.2.2 PID Controller

The PID controller is used to accurately adjust and control the responsiveness of the 3-way valve to correct the engines inlet (or outlet) temperature to match the desired setpoint. The PID controller has three

©2025 Caterpillar. All rights reserved.

Caterpillar: Confidential Green

configurable setpoints for Proportional Gain, Integral Gain and Derivative Gain and should incorporate anti-windup protection to prevent integral windup.

The output of the PID Loop is a relative value (0 – 100%) that can be used to drive the connected 3-way valve (100% indicates maximal cooling).

7.2.3 End Position Sensors

Since control logic needs to know when the valve is at one of its two stop positions, end position sensors must be available and connected to two digital inputs. Movements into the direction of the end position should be suppressed.

The current position is expressed from the status of the digital inputs by three states: warm (0%), in between (50%), cold (100%).

7.3 Pump Control

Pump control is embedded in regulation context which may lead to frequent off-on demands. To be as flexible as possible, the demand output signal gets computed based on enable/disable signal, immediate stop, and an internal deactivation delay timer. The following is the basic functionality for both pumps (main pump in engine cooling circuit, second pump in the emergency cooling circuit)

7.3.1 Pump Follow-up Delay Timer

Feature to provide flexibility for cascading regulations. If there is no need for an immediate stop, the delay timer starts when the activation demand for the valve + pump combination switches to stop demand. If the delay time expires, the output signal gets deactivated.

Any need for an immediate stop overrules pump start demand or delay timer regarding pump output signal. Delay timer remains active until it expires, meaning that regulation output is reactivated if the immediate stop gets withdrawn while the activation signal is still valid.

7.3.2 Immediate Stop

An E-Stop overrules any active pump demand and switches off the circulation pump activation signal output. The output signal to the pump remains switched off as long as the immediate stop is active. If the immediate stop condition signal is withdrawn, regulation output might get reactivated due to activation demands from Enable/Disable or pump deactivation delay timer.

7.4 Control Setpoints

This subsection contains the complete collection of function-related parameters required to set-up and tune the control.

©2025 Caterpillar. All rights reserved.

Caterpillar: Confidential Green

Table 7.1 Engine Cooling Circuit 3-Way Valve and Pump Control Setpoints

Parameter	Resolution	Unit	Range / Status
Engine Coolant Mixing Valve Installation Status	-	-	Installed Not Installed
Minimum Desired Engine Coolant Temperature Configuration <High Resolution>	0.1	°C	[0,200]
Maximum Desired Engine Coolant Temperature Configuration <High Resolution>	0.1	°C	[0,200]
Engine Coolant Mixing Valve Control (Proportional) Gain Percentage	0.01	%	[0,100]
Engine Coolant Mixing Valve Control (Integral) Gain Percentage	0.01	%	[0,100]
Engine Coolant Mixing Valve Control (Derivative) Gain Percentage	0.01	%	[0,100]
Engine Coolant Pump Deactivation Delay Time Post Engine Stop	1	sec	[0,3600]
Engine Coolant Pump Diagnostic Response Configuration	-	-	Warning Soft Shutdown
Engine Coolant Pump #2 System Installation	-	-	Not Installed Customer Heating Circuit Engine Cooling Circuit
Engine Coolant Pump #2 Deactivation Delay Time Post Engine Stop	1	sec	[0,3600]
Engine Coolant Pump #2 Diagnostic Response Configuration	-	-	Warning Soft Shutdown
Engine Coolant Temperature Minimum Input Value	0.1	°C	[0,200]
Engine Coolant Temperature Maximum Input Value	0.1	°C	[0,200]

Engine Coolant Mixing Valve Installation Status
Used to read and program the installation status of the engine coolant circuit mixing control valve.

Minimum Desired Engine Coolant Temperature Configuration <High Resolution>
Used to read and program the minimum desired engine coolant temperature. This parameter configures the lower bound of the range accepted by the temperature control module for the desired engine coolant temperature. If the received desired engine coolant value is below this lower bound, the temperature control module controls to the lower bound.

Maximum Desired Engine Coolant Temperature Configuration <High Resolution>
Used to read and program the maximum desired engine coolant temperature. This parameter configures the upper bound of the range accepted by the temperature control module for the desired engine coolant temperature. If the received desired engine coolant value is above this upper bound, the temperature control module controls to the upper bound.

©2025 Caterpillar. All rights reserved.

Caterpillar: Confidential Green

Engine Coolant Mixing Valve Control (Proportional) Gain Percentage
Used to read and program the proportional gain for a PID controller used to control the engine circuit coolant valve position as an absolute percentage of factory set proportional gain.

Engine Coolant Mixing Valve Control (Integral) Gain Percentage
Used to read and program the integral gain for a PID controller used to control the engine circuit coolant valve position as an absolute percentage of factory set integral gain.

Engine Coolant Mixing Valve Control (Derivative) Gain Percentage
Used to read and program the derivative gain for a PID controller used to control the engine circuit coolant valve position as an absolute percentage of factory set integral gain.

Engine Coolant Pump Deactivation Delay Time Post Engine Stop
Used to read and program the maximum amount of time the engine circuit coolant pump continues to run after the engine is stopped.

Engine Coolant Pump Diagnostic Response Configuration
Used to read and program the desired system response to an engine coolant pump diagnostic.

Engine Coolant Pump #2 System Installation
Used to read and program the installation status of the engine coolant pump #2.

Engine Coolant Pump #2 Deactivation Delay Time Post Engine Stop
Used to read and program the maximum amount of time the engine circuit coolant pump #2 continues to run after the engine is stopped.

Engine Coolant Pump #2 Diagnostic Response Configuration
Used to read and program the desired system response to a Engine Coolant Pump #2 diagnostic.

Engine Coolant Temperature Minimum Input Value
Used to read and program the Engine Coolant Temperature that corresponds to the minimum input value. (Reference SPN 1637 Engine Coolant Temperature (High Resolution)). For example, for a current loop sensor, the minimum input value is the value to be used when the sensor is outputting 4mA.

Engine Coolant Temperature Maximum Input Value
Used to read and program the Engine Coolant Temperature that corresponds to the maximum input value. (Reference SPN 1637 Engine Coolant Temperature (High Resolution)). For example, for a current loop sensor, the maximum input value is the value to be used when the sensor is outputting 20mA.

©2025 Caterpillar. All rights reserved.

Caterpillar: Confidential Green

7.5 Diagnostics and Feedback

7.5.1 Diagnostics

The following table defines the diagnostics events associated with this feature:

Table 7.2 Engine Cooling Circuit 3-Way Valve and Pump Control Diagnostics Events

SPN	Name	FMI	ERC	Description	Delay	Pre-Condition ?Delay
4076	Engine Coolant Temperature 2	1	Soft Shutdown	Engine Coolant Temperature 2 sensor error (current/signal level above/below normal range)	300s	0s
4076	Engine Coolant Temperature 2	0	Soft Shutdown	Engine Coolant Temperature 2 sensor error (current / signal level above normal range)	300s	0s
4076	Engine Coolant Temperature 2	18	Warning	Engine Coolant Temperature 2 sensor error (current/signal level above normal range)	500ms	0s
4076	Engine Coolant Temperature 2	16	Warning	Engine Coolant Temperature 2 sensor error (current/signal level below normal range)	500ms	0s
4076	Engine Coolant Temperature 2	7	Soft Shutdown	Engine Coolant Temperature 2 sensor error (not responding properly / no sensor value due to IO-terminal error)	300s	0s
4076	Engine Coolant Temperature 2	12	Warning	Engine Coolant Temperature 2 sensor error (not responding properly / no sensor value due to IO-terminal error)	500ms	0s
20866	Engine Coolant Differential Pressure Switch Status	1	Hard Shutdown	Engine Coolant Differential Pressure too low	3s	30s
3605	Engine Coolant Pump Control	12		Engine Coolant pump failed (digital feedback)	0s	0s
21155	Engine Coolant Pump 2 Control	12		Engine Coolant Secondary pump failed (emergency cooling circuit pump, digital feedback)	0s	0s
111	Engine Coolant Level 1	11	Hard Shutdown	Engine Coolant Level 1 low coolant level	0s	0s
6303	Engine Coolant Level 2	11	Hard Shutdown	Engine Coolant Level 2 low coolant level.	0s	0s

©2025 Caterpillar. All rights reserved.

Caterpillar: Confidential Green

7.5.2 Status Events

The following table defines the status events associated with this feature:

Table 7.3 Engine Cooling Circuit 3-Way Valve and Pump Control Status Events

Name	Description	Reference SPN	Reference Datapoint	Delay	Pre-Condition Delay
Engine Coolant Control Valve Cold Position Switch Activated	The digital input for the switch that reflects the "cold" position being reached on the engine coolant control valve has been activated. This digital input identifies that the valve is now fully open to provide the maximum amount of cooling for the engine.	4194	Engine Coolant Thermostat Opening	3s	0 s
Engine Coolant Control Valve Cold Position Switch Deactivated	The digital input for the switch that reflects the "cold" position being reached on the engine coolant control valve has been deactivated. This digital input identifies that the valve is no longer fully open and may be in a mixing position.	4194	Engine Coolant Thermostat Opening	3s	0 s
Engine Coolant Control Valve Warm Position Switch Activated	The digital input for the switch that reflects the "warm" position being reached on the engine coolant control valve has been activated. This digital input identifies that the valve is now fully closed to provide maximum heat to the engine.	4194	Engine Coolant Thermostat Opening	3s	0 s
Engine Coolant Control Valve Warm Position Switch Deactivated	The digital input for the switch that reflects the "warm" position being reached on the engine coolant control valve has been deactivated. This digital input identifies that the valve is no longer fully closed and may be in a mixing position.	4194	Engine Coolant Thermostat Opening	3s	0 s
Engine Coolant Pump Start Command Activated	Indicates that Engine Coolant Pump command signal has been activated.	3605	Engine Coolant Pump Control	0 s	0 s
Engine Coolant Pump Start Command Deactivated	Indicates that Engine Coolant Pump command signal has been deactivated.	3605	Engine Coolant Pump Control	0 s	0 s
Engine Coolant Pump #2 Start Command Activated	The start command, that controls the second instance of coolant pumps for the engine, has been activated.	21155	Engine Coolant Pump 2 Control	0 s	0 s
Engine Coolant Pump #2 Start Command Deactivated	The start command, that controls the second instance of coolant pumps for the engine, has been deactivated.	21155	Engine Coolant Pump 2 Control	0 s	0 s

©2025 Caterpillar. All rights reserved.

Caterpillar: Confidential Green

7.5.3 Data Feedback

The following table defines the data feedback associated with this feature:

Table 7.4 Engine Cooling Circuit 3-Way Valve and Pump Control Data Feedback

SPN	Name	Description	Unit
4076	Engine Coolant Temperature 2	Temperature of liquid found in engine cooling system.	°C
20865	Desired Engine Coolant Temperature	Desired engine coolant temperature of the engine to an electronic thermostat.	°C
4197	Desired Engine Coolant Thermostat Opening	Indicates the desired position of the engine coolant control valve. 0% represents the thermostat allows flow to completely bypass the radiator and 100% represents the flow is fully through the radiator.	%
4194	Engine Coolant Thermostat Opening	The current position of the Thermostat used to regulate the temperature of the engine coolant. 0% represents the thermostat allows flow to completely bypass the heat emission and 100% represents the flow is fully through the heat emission (cooling).	%
3605	Engine Coolant Pump Control	Control setting for an electrically actuated engine coolant circulating pump.	ON OFF
21155	Engine Coolant Pump 2 Control	Control setting for an electrically actuated engine coolant circulating pump.	ON OFF

7.6 Inputs and Outputs

The following table defines the hardware IO signals required for engine cooling circuit 3-way valve and pump control.

Table 7.5 Engine Cooling Circuit 3-Way Valve and Pump Control I/O Signals

Descriptive Name	Status	DI	DO	AI (4-20mA)	AO (4-20mA)
Engine Coolant Pump Start	24V = On		X		
Engine Coolant Pump Failed Indicator	Open = Fault	X			
Engine Coolant Differential pump pressure Switch	Open = Fault	X			
Engine Coolant Level 1	Open = Fault	X			
Engine Coolant Temperature 2	Configurable			X	
Engine Coolant 3-Way Valve control	0-100%				X
Engine Coolant 3-Way Valve Opening at 0 % heat export	24V = 0%	X			
Engine Coolant 3-Way Valve Opening at 100 % heat export	24V = 100%	X			
Engine Coolant Pump 2 Start (Emergency cooling)	24V = On		X		
Engine Coolant Pump 2 Failed Indicator (Emergency cooling)	Open = Fault	X			
Engine Coolant Level in emergency cooling circuit	Open = Fault	X			

©2025 Caterpillar. All rights reserved.

Caterpillar: Confidential Green

7.7 HMI Display Requirements/Concepts

The controller supports the following visualizations and configurations relating to engine cooling circuit (3-way valve and pump control).

7.7.1 Engine Cooling Circuit Valve Control Overview Parameters

The engine cooling circuit parameters can be seen from the “Cooling Circuits and Heating Circuit” overview screen. This screen should be accessible through the menu location within the HMI navigation in (See Figure 7.4)
Menu → Overviews → Balance of Plant → Cooling Circuits and Heating Circuit.

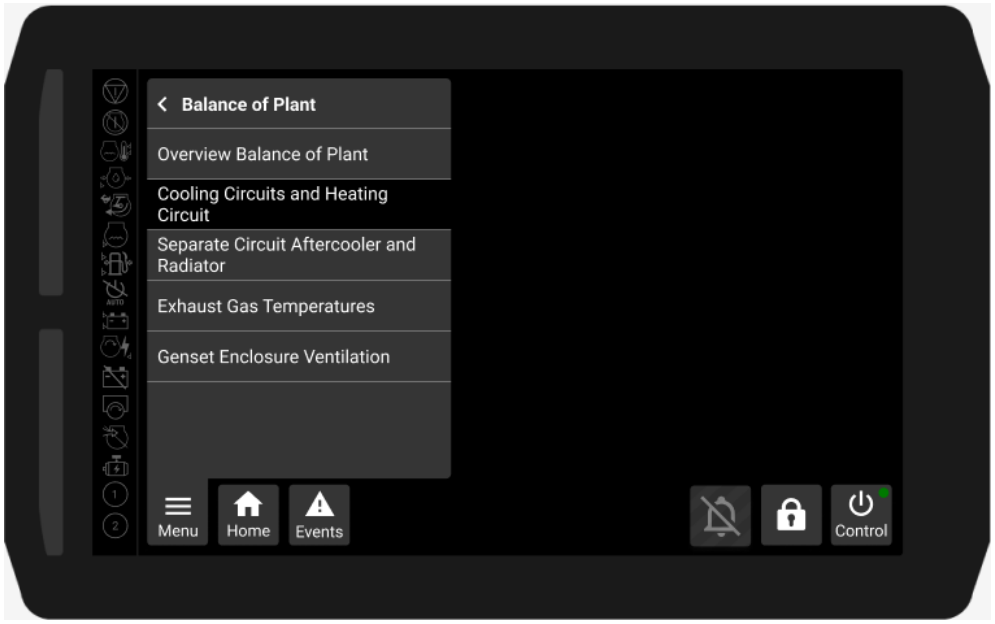

Figure 7.4 Balance of Plant Submenu (Cooling Circuits and Heating Circuits)

Figure 7.5 shows the engine cooling circuits and heating circuit overview screen. At the cooling circuits and heating circuit overview screen, the parameters are being displayed along with their respective values and units. At the top right-side corner, a shortcut to move between other "Balance of Plant" overview menu, is available. This allows users to scroll through all screens from this menu without opening the Balance of Plant submenu. If the last screen from the submenu is reached and the user clicks on the right button, the user will return to the first screen from the submenu.

Also, the shortcut to move from “Cooling Circuits and Heating Circuit” overview screen to “Engine Cooling Circuit and Heating Circuit” configure screen is available at the top right-side corner of the screen (see reference [10]). The user needs to scroll through the screen to view all the parameters associated with this screen.

Note: This section only covers the parameters associated with engine cooling circuit valve control as highlighted in the figure 7.5. For the details about parameters associated with engine colling circuit (radiator control) etc. refer to related sections within this manual.

©2025 Caterpillar. All rights reserved.

Caterpillar: Confidential Green

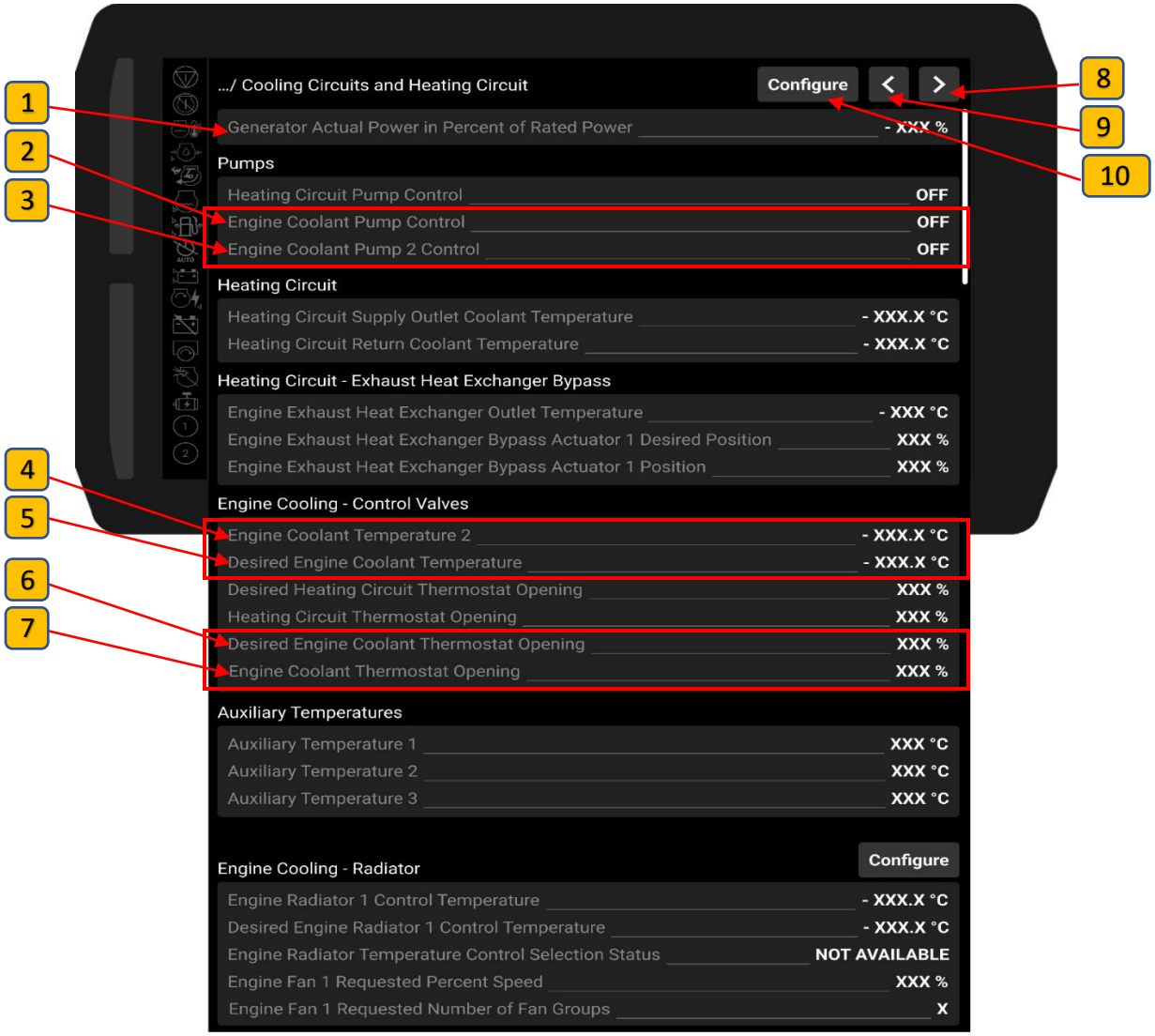

Figure 7.5 Cooling Circuits and Heating Circuit Overview Screen – Valve Control Parameters

The following table describes the unit and ranges associated with each parameter.

Table 7.6 Cooling Circuits and Heating Circuit Overview Screen – Valve Control Parameters

Ref	Parameter Name	Unit	Valid Data Range
1	Generator Actual Power in Percent of Rated Power	%	-251 to 250.99%
2	Engine Coolant Pump Control	-	Off On Reserved Don't Care / take no action
3	Engine Coolant Pump 2 Control	-	Off On Reserved Don't Care / take no action

©2025 Caterpillar. All rights reserved.

Caterpillar: Confidential Green

Ref	Parameter Name	Unit	Valid Data Range
4	Engine Coolant Temperature 2	°C	-273 to 1735 °C
5	Desired Engine Coolant Temperature	°C	-273 to 1735 °C
6	Desired Engine Coolant Thermostat Opening	%	0 to 100%
7	Engine Coolant Thermostat Opening	%	0 to 100%
8	Shortcut to Separate Circuit Aftercooler and Radiator Screen	-	-
9	Shortcut to Overview Balance of Plant Screen	-	-
10	Shortcut Button to the BoP Configure Screen: "Engine Cooling Circuit and Heating Circuit"	-	-

Note: The show/hide rules for this section of parameters will remain same as mentioned in the section 5.7.1 "SCAC Valve Control Overview Parameters". Hence it is not explicitly explained in this section.

7.7.2 Engine Cooling Circuit and Heating Circuit - Valve Control Configurable Parameters

The controller supports the following configurable parameters relating to engine cooling circuit and heating circuit.

The HMI has the ability to configure parameters associated with engine cooling circuit (valve control) via the engine cooling circuit and heating circuit configuration screen. All the possible settings related to engine cooling circuit (valve control) are being displayed in this configure screen and can be updated.

Initially, the user cannot change the write parameters since it is locked with level-1 (Operator) 'or' level-2 (Technician level) password. Upon entering the level-1 and level-2 passwords by clicking on the "Lock" button available at the right-side bottom corner, the engine cooling circuit and heating circuit screen gets "Unlocked", and now the user allowed to update the values (See Figure 6.6).

To view and update the parameter values, the user can access the configure screen by navigating to:
Menu → Configure → Balance of Plant → Engine Cooling Circuit and Heating Circuit.

The following Figure 7.6 shows the engine cooling circuit and heating circuit configure screen. At the top right-side corner of the screen shortcut button is available to go to cooling circuits and heating circuit overview screen. The user needs to use scroll bar to view and edit the data.

Note: The highlighted parameters in the Figure 7.6 are related to engine cooling circuit (valve control) and are described in this section. However, for other parameter details refer to related section of this manual.

Note: In the Figure 7.6 when the user selects the "Edit" button it will pop-up a standard keypad as shown in Figure 5.8 to enter the desired value.

Note: Parameter "**Engine Coolant Pump #2 System Installation**" is view only and the user cannot edit the settings of this parameter using HMI screen.

©2025 Caterpillar. All rights reserved.

Caterpillar: Confidential Green

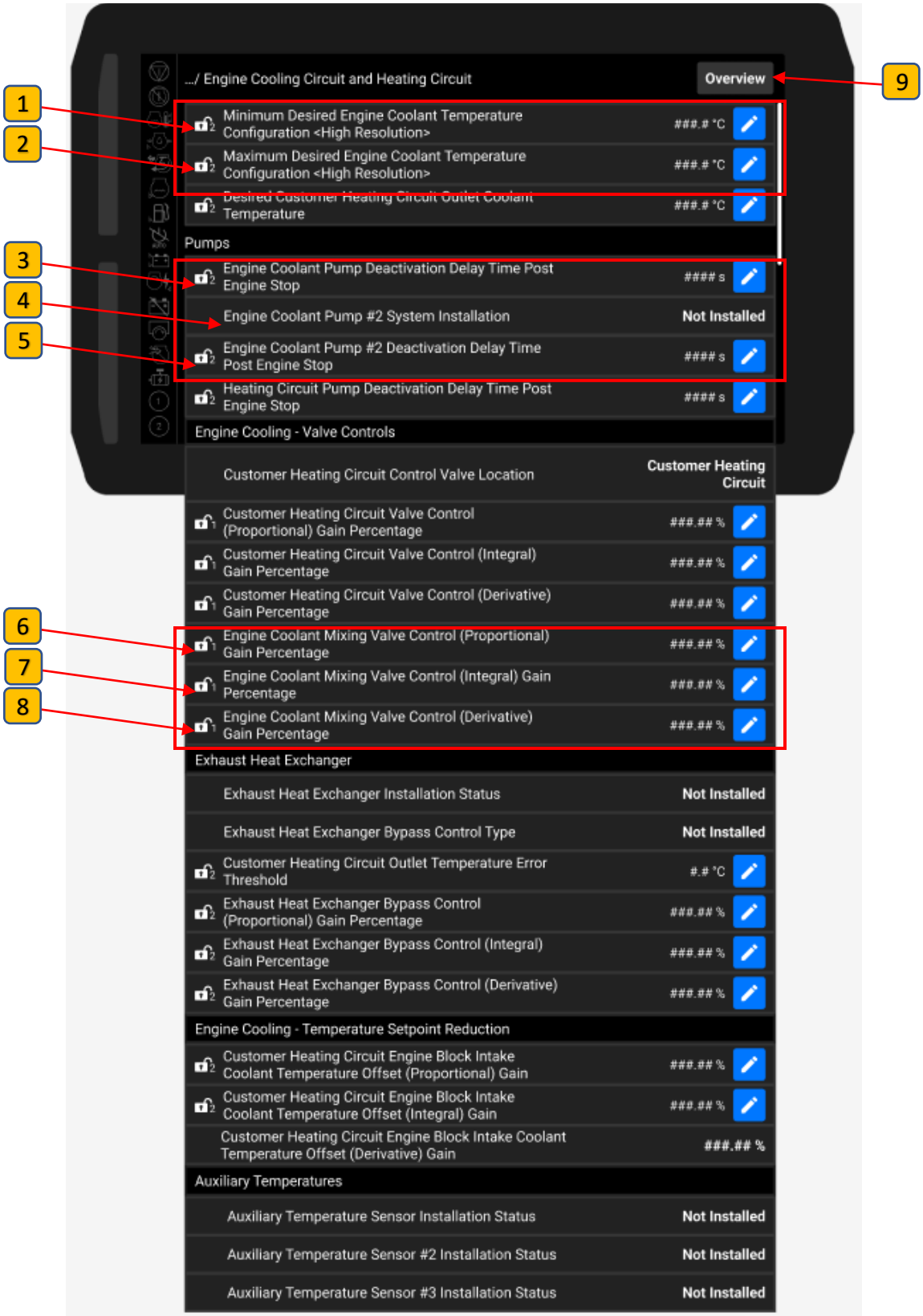

Figure 7.6 Engine Cooling Circuit and Heating Circuit Configure Screen – Valve Control Parameters

©2025 Caterpillar. All rights reserved.

Caterpillar: Confidential Green

Table 7.7 Engine Cooling Circuit and Heating Circuit Configure Screen - Valve Control Parameters

Ref	Parameter Name	Unit	Access Level	Resolution	Range
1	Minimum Desired Engine Coolant Temperature Configuration <High Resolution>	°C	Level 2	0.1	0 - 200 °C
2	Maximum Desired Engine Coolant Temperature Configuration <High Resolution>	°C	Level 2	0.1	0 - 200 °C
3	Engine Coolant Pump Deactivation Delay Time Post Engine Stop	s	Level 2	1	0 to 3600 s
4	Engine Coolant Pump #2 System Installation	-	Observer	Not Installed Customer Heating Circuit Engine Cooling Circuit	-
5	Engine Coolant Pump #2 Deactivation Delay Time Post Engine Stop	s	Level 2	1	0 to 3600 s
6	Engine Coolant Mixing Valve Control (Proportional) Gain Percentage	%	Level 1	0.01	0 to 100 %
7	Engine Coolant Mixing Valve Control (Integral) Gain Percentage	%	Level 1	0.01	0 to 100 %
8	Engine Coolant Mixing Valve Control (Derivative) Gain Percentage	%	Level 1	0.01	0 to 100 %
9	Shortcut to “Cooling Circuits and Heating Circuit” Overview Screen	-	-	-	-

©2025 Caterpillar. All rights reserved.

Caterpillar: Confidential Green

8.0 Engine Cooling Circuit (Radiator Control)

8.1 Functional Description

The purpose of the high temperature cooling circuit radiator is to remove excess heat from the engine cooling circuit (also referred to as Jacket Water Cooling) and to help maintain the correct temperature. The goal for the radiator control is to regulate the radiator outlet temperature while minimizing the energy consumption required by the radiator. The system can be configured to control one of the following Radiator types:

- No Radiator Control
- Radiator with frequency control (VFD)
- Radiator with stage switching (1 - max. 8 stages)

8.1.1 Operational Logic

The control of the radiator in the engine cooling circuit is activated and deactivated together with the control of the Engine 3-way valve and pump.

Startup Phase:

- Genset start is initiated
  - Radiator Start Digital Output is Activated.

Warm-Up Phase:

- Radiator control (4-20mA) is controlled based on the radiator outlet temperature.

Normal Operation:

- Engine reaches optimal temperature.
- 3-way valve sends hot water to radiator.
- Radiator speed is regulated based on its outlet temperature (4-20mA).

Shutdown:

- Radiator outlet temperature regulation is stopped after the engine state has changed to “engine stopped” and “Engine Circuit Pump Deactivation Delay Time” has expired.

8.1.2 Flow diagram: VFD or Single Speed Fan Radiator Control in Different Use Cases

The following Figure 8.1 shows the flow diagram of engine cooling circuit radiator control with 3 different use cases as mentioned:

A) Power Only Scenario – Radiator within engine cooling circuit
B) CHP Scenario - Radiator of the engine cooling circuit as part of an emergency cooling circuit
C) CHP Scenario - Radiator of the engine cooling circuit as part of the customer site heating circuit

©2025 Caterpillar. All rights reserved.

Caterpillar: Confidential Green

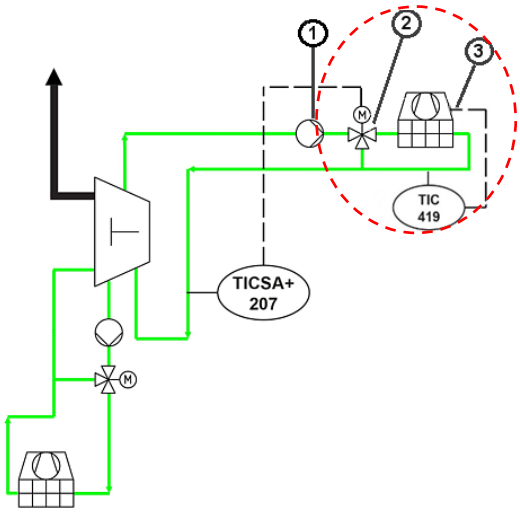

(A)

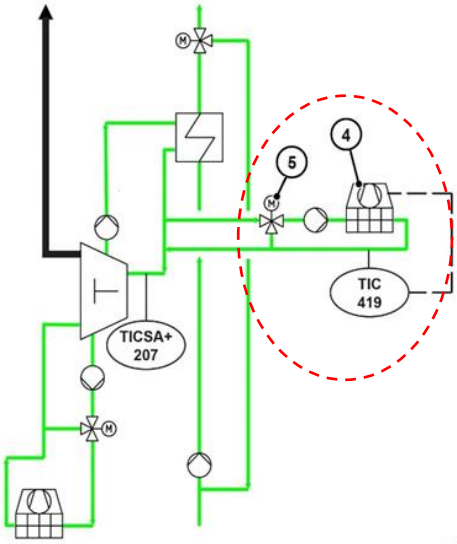

(B)

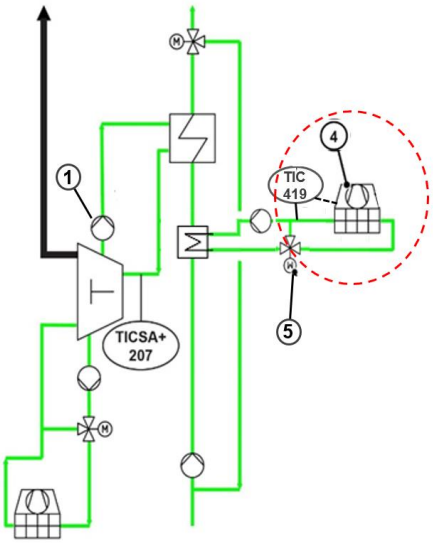

(C)

Figure 8.1 Engine Cooling Circuit (Radiator Control) Flow Diagrams

1. Pump within engine cooling circuit
2. 3-Way Valve within engine cooling circuit (jacket cooling water system) for power only scenario
3. Radiator within engine cooling circuit in power only scenario - Figure 8.1 (A)
4. Radiator of the engine cooling circuit as part of an emergency cooling circuit in CHP scenario, which is connected either to the engine cooling circuit – Figure 8.1 (B); or the customer site heating circuit – Figure 8.1 (C).
5. 3-Way Valve of the engine cooling circuit as part of the emergency cooling circuit in CHP scenario. which is connected either to the engine cooling circuit – Figure 8.1 (B); or the customer site heating circuit – Figure 8.1 (C).

©2025 Caterpillar. All rights reserved.

Caterpillar: Confidential Green

8.2 VFD Radiator Control

In the case of radiators with frequency control, on regulation activation all fans are activated. In the event of rising or falling cooling demands, the fan speeds are adjusted accordingly using a speed control. The control algorithm for the VFD radiator utilizes same control algorithm as defined in the chapter 6.2 with following differences:

- There is no dependency on the gas operating mode as defined in chapter 0 “Temperature Setpoint Calculation”.
- The engine cooling circuit radiator has its own datapoints (digital and analog inputs and outputs), parameter and events.
- Difference calculation (chapter **Error! Reference source not found.**) is based on the engine cooling circuit radiators outlet temperature.

8.2.1 Enable/Disable

The enable / disable input activates regulation computation and initiates an enable signal to be sent to the VFD controller (which activates the fans) for as long as the controller requires

8.2.2 Temperature Setpoint Calculation

The temperature setpoint for the outlet temperature at the radiator depends on the current power of the engine, expressed as a percentage of the rated power. The setpoint is constantly updated based on linear interpolation between the two temperature setpoints *Max* at 40% of the rated engine power and *Min* at 100% of the rated engine power. The setpoints outside the interval between 40 % and 100 % of the rated power remain fixed at their respective Min and Max values. The graph below provides an example of the curve.

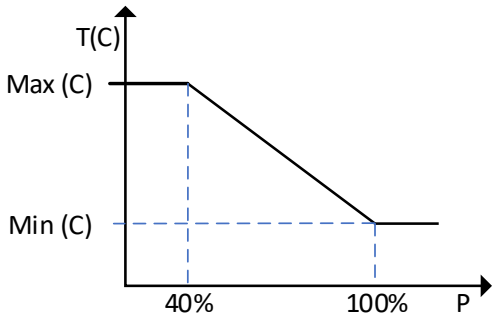

Figure 8.2 Temperature Setpoint Calculation Curve – VFD Radiator Control (Engine Cooling Circuit)

While operating in active island mode a constant setpoint is applied, using the temperature setpoint input at 100% engine power for the active gas type.

8.2.3 PID Controller

The PID controller is used to accurately adjust and control the responsiveness of the radiator to correct the outlet temperature to match the desired setpoint. The PID controller has three configurable setpoints for proportional gain, integral gain and derivative gain.

The output of the PID loop should be a value that can be used to drive a configurable 4-20 mA output (0%-100%) to adjust fan speed. (Default: 4mA: 0%, 20mA:100 %)

©2025 Caterpillar. All rights reserved.

Caterpillar: Confidential Green

8.3 Staged Radiator Control (Single Speed Fans)

In the case of using a staged radiator, several fans are grouped together into one cooler stage. The fans are operated at a constant speed. Cooler stage 1 is activated on activation of the regulation. In the event of rising or falling cooling demands, the cooler stages are activated or deactivated one after the other. The requested cooling capacity can thus be expressed as "cooling level" as a synonym for the "number of requested cooler stages". Thus, maximal available level is limited by the configured number of available cooler stages and the algorithm to activate/deactivate the next cooler stage.

8.3.1 Regulation To The Outlet Temperature At The Radiator In Engine Cooling Circuit

A configurable setpoint for “Separate Circuit Aftercooler Fan Control Reaction Delay Time” is used to program the reaction delay time for separate circuit aftercooler fan control. This is the amount of time the temperature difference between the Actual and Desired Separate Circuit Aftercooler Radiator outlet coolant temperature is greater than the threshold before additional fans can be added or removed. This time delay is used to prevent fans from being activated/deactivated by a short-term change in temperature above, the threshold effectively being a filter for the temperature.

Individual radiator stages are activated or deactivated depending on the cooling demand. A “Separate Circuit Aftercooler Fan Control Stabilization Time” is used to prevent the cooling stages from switching frequently. The stabilization time is programmable in seconds and is the amount of time after the activation or deactivation of a separate circuit aftercooler fan before other changes can be made to the fan control in the same cooling direction. If the radiator outlet temperature is too (low/) high for longer than the stabilization time and the temperature difference is greater than the setpoint value, cooler stages are activated (/deactivated) at the stabilization time intervals.

The control algorithm for the radiator to activate and deactivate the stages is shown in the control block below.

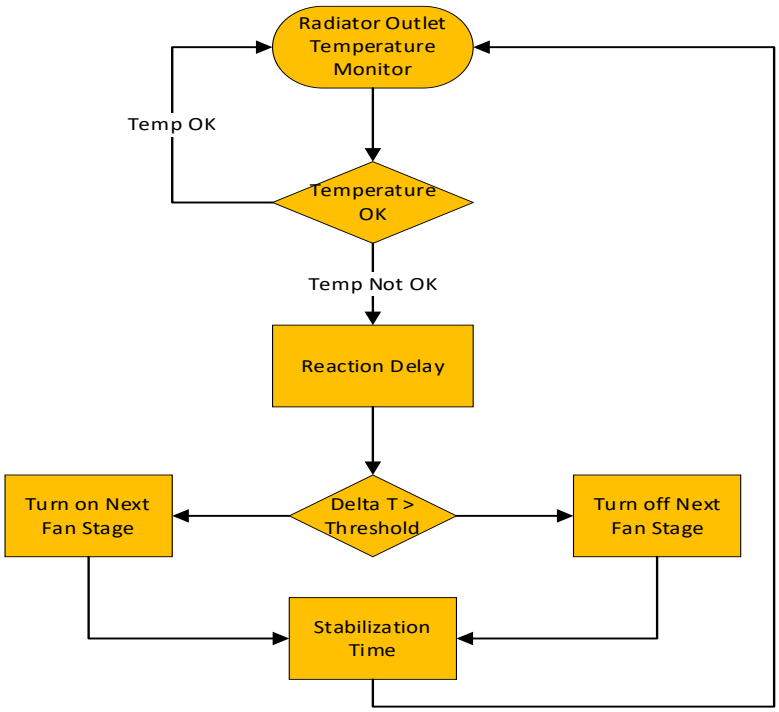

Figure 8.3 Staged Radiator Control Algorithm (Engine Cooling Circuit)

©2025 Caterpillar. All rights reserved.

Caterpillar: Confidential Green

8.3.2 Enable/Disable

The enable/disable input activates regulation computation and initiates / deactivates sending a release signal to the first group of fans summarized in one stage.

8.3.2 Temperature Setpoint Calculation

The temperature setpoint for the outlet temperature at the radiator depends on the current power of the engine, expressed as a percentage of the rated power. The setpoint is constantly updated based on linear interpolation between the two temperature setpoints Max at 40% of the rated engine power and Min at 100% of the rated engine power. The setpoints outside the interval between 40% and 100% of the rated power remain fixed at their respective Min and Max values. The graph below provides an example of the curve.

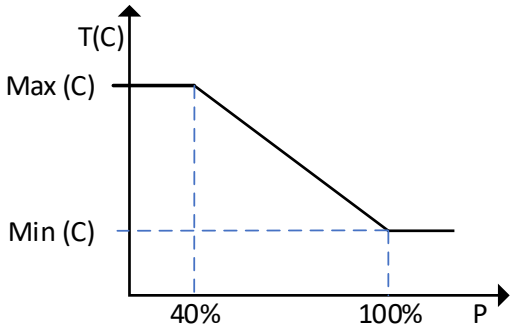

Figure 8.4 Temperature Setpoint Calculation Curve – Staged Radiator Control (Engine Cooling Circuit)

While operating in active island mode a constant setpoint is applied, using the temperature setpoint input at 100% engine power for the active gas type.

8.4 Control Setpoints

This subsection contains the complete collection of function-related parameters required to set-up and tune the control. The engine cooling circuit radiator control has 3 sets of setpoints listed below:

1. General Radiator Setpoints
2. VFD Controlled Radiator Setpoints
3. Staged Radiator Setpoints (Single Speed Fans)

Table 8.1 Engine Cooling Circuit General Radiator Setpoints

Parameter	Resolution	Unit	Range/Status
Engine Cooling Fan Control Output Type	-	-	Not Installed On/Off 4 to 20 mA
Engine Cooling Fan Minimum Air Flow Coolant Temperature	0.1	°C	[0,200]
Engine Cooling Fan Maximum Air Flow Coolant Temperature	0.1	°C	[0,200]
Engine Radiator #1 Control Temperature Minimum Input Value	0.1	°C	[0,200]
Engine Radiator #1 Control Temperature Maximum Input Value	0.1	°C	[0,200]

©2025 Caterpillar. All rights reserved.

Caterpillar: Confidential Green

Engine Cooling Fan Control Output Type
Used to read and program the type of fan control for the Engine Circuit Radiator. "4-20mA" = Analog speed control of the fan, "On/Off" = Digital Outputs turn On/Off individual fans.

Engine Cooling Fan Minimum Air Flow Coolant Temperature
Used to read and program the coolant temperature value at which the system requires the minimum engine cooling fan air flow. This is the temperature setpoint at minimum fan air flow, if the setpoint is not map based.

Engine Cooling Fan Maximum Air Flow Coolant Temperature
Used to read and program the coolant temperature value at which the system requires the maximum engine cooling fan air flow. This is the temperature setpoint at maximum fan air flow, if the setpoint is not map based.

Engine Radiator #1 Control Temperature Minimum Input Value
sed to read and program the Engine Radiator #1 Control Temperature that corresponds to the minimum input value. (Reference SPN 20811 Engine Radiator 1 Control Temperature). For example, for a current loop sensor, the minimum input value is the value to be used when the sensor is outputting 4mA.

Engine Radiator #1 Control Temperature Maximum Input Value
Used to read and program the Engine Radiator #1 Control Temperature that corresponds to the maximum input value. (Reference SPN 20811 Engine Radiator 1 Control Temperature). For example, for a current loop sensor, the maximum input value is the value to be used when the sensor is outputting 20mA.

Table 8.2 Engine Cooling Circuit VFD Controlled Radiator Setpoints

Parameter	Resolution	Unit	Range/Status
Engine Cooling Fan Speed (Proportional) Gain Percentage <High Resolution>	0.01	%	[0,100]
Engine Cooling Fan Speed (Integral) Gain Percentage	0.01	%	[0,100]
Engine Cooling Fan Speed (Derivative) Gain Percentage	0.01	%	[0,100]

Engine Cooling Fan Speed (Proportional) Gain Percentage <High Resolution>
Used to read and program the proportional gain for a PID controller used to control the engine cooling circuit fan speed as an absolute percentage of factory set proportional gain.

A value of 100% means that difference between actual water temperature and its setpoint of +/- 1°C leads to maximum or minimum fan speed, if both other parameters are set to 0%.

Engine Cooling Fan Speed (Integral) Gain Percentage
Used to read and program the integral gain for a PID controller used to control the engine cooling circuit fan speed as an absolute percentage of factory set integral gain.

A value of 100% means that an integral of the difference between actual water temperature and its setpoint of +/- 1°Cs leads to maximum or minimum fan speed, if both other parameters are set to 0%.

©2025 Caterpillar. All rights reserved.

Caterpillar: Confidential Green

Engine Cooling Fan Speed (Derivative) Gain Percentage
Used to read and program the derivative gain for a PID controller used to control the engine cooling circuit fan speed as an absolute percentage of factory set integral gain.

A value of 100% means that a derivate of the difference between actual water temperature and its setpoint of +/- 1°C/s leads to maximum or minimum fan speed, if both other parameters are set to 0%.

Table 8.3 Engine Cooling Circuit Staged Radiator Setpoints (Single Speed Fans)

Parameter	Resolution	Unit	Range/Status
Number of Engine Cooling Fans	1	-	[1, 8]
Engine Cooling Fan Control Stabilization Time	1	s	[0, 60]
Engine Cooling Fan Control Coolant Temperature Deviation Reaction Delay Time	1	s	[0, 10]
Engine Cooling Fan Control Coolant Temperature Deviation Threshold	0.1	°C	[1, 10]

Number of Engine Cooling Fans
Used to read and program the number of fans on the engine cooling circuit radiator.

Engine Cooling Fan Control Stabilization Time
Used to read and program the stabilization time for the engine cooling fan control. This is the amount of time after the activation or deactivation of an engine cooling fan before any other fan control changes can occur.

Engine Cooling Fan Control Coolant Temperature Deviation Reaction Delay Time
Used to read and program the reaction delay time for the engine cooling fan control. This is the amount of time the absolute temperature difference between the Actual and Desired engine cooling radiator outlet coolant temperatures is greater than the threshold before the control will consider the temperature to be out of range.

Engine Cooling Fan Control Coolant Temperature Deviation Threshold
Used to read and program the temperature difference threshold between actual and desired engine cooling radiator outlet coolant temperatures. When the temperature difference is greater than the threshold, the control will consider the temperature to be out of range.

©2025 Caterpillar. All rights reserved.

Caterpillar: Confidential Green

8.5 Diagnostics and Feedback

8.5.1 Diagnostics

The following table defines the diagnostics events associated with this feature:

Table 8.4 Engine Cooling Circuit Radiator Control Diagnostics Events

SPN	Name	FMI	ERC	Description	Delay	Pre-Condition Delay
20811	Engine Radiator 1 Control Temperature	1	Soft Shutdown	Engine Radiator 1 Control Temperature sensor error (current/signal level below normal range)	300s	0s
20811	Engine Radiator 1 Control Temperature	0	Soft Shutdown	Engine Radiator 1 Control Temperature sensor error (current / signal level above normal range)	300s	0s
20811	Engine Radiator 1 Control Temperature	18	Warning	Engine Radiator 1 Control Temperature sensor error (current/signal level below normal range)	500 ms	0s
20811	Engine Radiator 1 Control Temperature	16	Warning	Engine Radiator 1 Control Temperature sensor error (current / signal level above normal range)	500 ms	0s
20811	Engine Radiator 1 Control Temperature	7	Soft Shutdown	Engine Radiator 1 Control Temperature sensor is missing (not responding properly / no sensor value due to IO-terminal error)	300s	0s
20811	Engine Radiator 1 Control Temperature	12	Warning	Engine Radiator 1 Control Temperature sensor error (not responding properly / no sensor value due to IO-terminal error)	500 ms	0s
20813	Engine Radiator 1 Fan 1 Status	0	Soft Shutdown	Engine Radiator 1 Failure	300s	0s
20813	Engine Radiator 1 Fan 1 Status	12	Warning	Engine Radiator 1 Failure	0s	0s

8.5.2 Status Events

The following tables define the status events associated with this feature:

Table 8.5 Engine Cooling Circuit VFD controlled radiator Status Events

Name	Description	Delay	Pre-Condition Delay
Engine Radiator Fan #1 Enable Command Activated	The enable command, that controls the first instance of multiple fans for the engine, has been activated.	0s	0s
Engine Radiator Fan #1 Enable Command Deactivated	The enable command, that controls the first instance of multiple fans for the engine, has been deactivated.	0s	0s
Engine Radiator Fan #1 Enable Command Activated	The enable command, that controls the first instance of multiple fans for the engine, has been activated.	0s	0s

©2025 Caterpillar. All rights reserved.

Caterpillar: Confidential Green

Table 8.6 Engine Cooling Circuit Radiator With Single Speed Fans Status Events

Name	Description	Delay	Pre-Condition Delay
Engine Radiator #1 Fan #1 Enable Command Activated	The enable command of the Engine Radiator #1 Fan group #1 has been set to active.	0s	0s
Engine Radiator #1 Fan #1 Enable Command Deactivated	The enable command of the Engine Radiator #1 Fan group #1 has been deactivated.	0s	0s
Engine Radiator #1 Fan #2 Enable Command Activated	The enable command of the Engine Radiator #1 Fan group #2 has been set to active.	0s	0s
Engine Radiator #1 Fan #2 Enable Command Deactivated	The enable command of the Engine Radiator #1 Fan group #2 has been deactivated.	0s	0s
Engine Radiator #1 Fan #3 Enable Command Activated	The enable command of the Engine Radiator #1 Fan group #3 has been set to active.	0s	0s
Engine Radiator #1 Fan #3 Enable Command Deactivated	The enable command of the Engine Radiator #1 Fan group #3 has been deactivated.	0s	0s
Engine Radiator #1 Fan #4 Enable Command Activated	The enable command of the Engine Radiator #1 Fan group #4 has been set to active.	0s	0s
Engine Radiator #1 Fan #4 Enable Command Deactivated	The enable command of the Engine Radiator #1 Fan group #4 has been deactivated.	0s	0s
Engine Radiator #1 Fan #5 Enable Command Activated	The enable command of the Engine Radiator #1 Fan group #5 has been set to active.	0s	0s
Engine Radiator #1 Fan #5 Enable Command Deactivated	The enable command of the Engine Radiator #1 Fan group #5 has been deactivated.	0s	0s
Engine Radiator #1 Fan #6 Enable Command Activated	The enable command of the Engine Radiator #1 Fan group #6 has been set to active.	0s	0s
Engine Radiator #1 Fan #6 Enable Command Deactivated	The enable command of the Engine Radiator #1 Fan group #6 has been deactivated.	0s	0s
Engine Radiator #1 Fan #7 Enable Command Activated	The enable command of the Engine Radiator #1 Fan group #7 has been set to active.	0s	0s
Engine Radiator #1 Fan #7 Enable Command Deactivated	The enable command of the Engine Radiator #1 Fan group #7 has been deactivated.	0s	0s
Engine Radiator #1 Fan #8 Enable Command Activated	The enable command of the Engine Radiator #1 Fan group #8 has been set to active.	0s	0s
Engine Radiator #1 Fan #8 Enable Command Deactivated	The enable command of the Engine Radiator #1 Fan group #8 has been deactivated.	0s	0s

8.5.3 Data Feedback

The following tables define the data feedback associated with this feature:

Table 8.7 Engine Cooling Circuit General Radiator Data Feedback

SPN	Name	Description	Unit
20811	Engine Radiator 1 Control Temperature	Temperature measured and reported by the device. It may be used for direct or remote (by another controller) control of radiator 1	°C
20812	Desired Engine Radiator 1 Control Temperature	The desired temperature of the temperature used to control the radiator fan speed	°C

©2025 Caterpillar. All rights reserved.

Caterpillar: Confidential Green

Table 8.8 Engine Cooling Circuit VFD Controlled Radiator Data Feedback

SPN	Name	Description	Unit
6730	Engine Fan 1 Requested Percent Speed	Fan speed of the second will use 0% to 100%.	%

Table 8.9 Engine Cooling Circuit Radiator with Single Speed Fans Data Feedback

SPN	Name	Description	Unit
20813	Engine Radiator 1 Fan 1 Status	Status of electrically operated cooling Radiator 1 Fan# 1 on an engine.	Inactive Active
20814	Engine Radiator 1 Fan 2 Status	Status of electrically operated cooling Radiator 1 Fan# 2 on an engine.	Inactive Active
20815	Engine Radiator 1 Fan 3 Status	Status of electrically operated cooling Radiator 1 Fan# 3 on an engine.	Inactive Active
20816	Engine Radiator 1 Fan 4 Status	Status of electrically operated cooling Radiator 1 Fan# 4 on an engine.	Inactive Active
20817	Engine Radiator 1 Fan 5 Status	Status of electrically operated cooling Radiator 1 Fan# 5 on an engine.	Inactive Active
20818	Engine Radiator 1 Fan 6 Status	Status of electrically operated cooling Radiator 1 Fan# 6 on an engine.	Inactive Active
20819	Engine Radiator 1 Fan 7 Status	Status of electrically operated cooling Radiator 1 Fan# 7 on an engine.	Inactive Active
20820	Engine Radiator 1 Fan 8 Status	Status of electrically operated cooling Radiator 1 Fan# 8 on an engine.	Inactive Active

8.6 Input and Outputs

The following are the hardware IO signals required for engine cooling circuit radiator control:

Table 8.10 Engine Cooling Circuit Radiator Control I/O Signals

Descriptive Name	Status	DI	DO	AI (4-20mA)	AO (4-20mA)
Engine Radiator 1 Control Temperature	Configurable			X	
Engine Radiator 1 VFD Start signal	24V = On		X		
Engine Radiator 1 Failed Indicator	Open = Fault	X			
Engine Radiator 1 VFD Control	0-100%				X
Engine Radiator 1 Fan group 1	24V = On		X		
Engine Radiator 1 Fan group 2	24V = On		X		
Engine Radiator 1 Fan group 3	24V = On		X		
Engine Radiator 1 Fan group 4	24V = On		X		
Engine Radiator 1 Fan group 5	24V = On		X		
Engine Radiator 1 Fan group 6	24V = On		X		
Engine Radiator 1 Fan group 7	24V = On		X		
Engine Radiator 1 Fan group 8	24V = On		X		

©2025 Caterpillar. All rights reserved.

Caterpillar: Confidential Green

8.7 HMI Display Requirements/Concepts

The controller supports the following visualizations and configurations relating to engine cooling circuit (3-way valve and pump control).

8.7.1 Engine Cooling Circuit Radiator Control Overview parameters

The engine cooling circuit radiator control parameters can be seen from the "Cooling Circuits and Heating Circuit" overview screen. This screen should be accessible through the menu location within the HMI navigation similar to section 7.7.1.

Menu → Overviews → Balance of Plant → Cooling Circuits and Heating Circuit.

Figure 8.5 Cooling Circuits and Heating Circuit Overview Screen – Radiator Control Parameters

Figure 8.5 shows the engine cooling circuits and heating circuit overview screen and the highlighted section refers to the radiator control related parameters. Refer to section 7.7.1 for other details such as show/hide rule, navigation etc.

©2025 Caterpillar. All rights reserved.

Caterpillar: Confidential Green

Table 8.11 Cooling Circuits and Heating Circuit Overview Screen – Radiator Control Parameters

Ref	Parameter Name	Unit	Valid Data Range
1	Engine Radiator 1 Control Temperature	°C	-273 to 1735 °C
2	Desired Engine Radiator 1 Control Temperature	°C	-273 to 1735 °C
3	Engine Radiator Temperature Control Selection Status	-	Engine Radiator 1 Control Temperature Engine Radiator 2 Control Temperature Error Not Available
4	Engine Fan 1 Requested Percent Speed	%	0 to 100%
5	Engine Fan 1 Requested Number of Fan Groups	-	0 to 65535
6	Shortcut Button to the "Engine Cooling Radiator" Configure Screen	-	-

Note: This section only covers the parameters associated with engine cooling circuit radiator control as highlighted in the figure 8.5. For the details about parameters associated with other engine colling circuit and heating circuit refer to related sections within this manual.

8.7.2 Engine Cooling Radiator Configure Screen

The HMI has the ability to configure parameters associated with engine cooling circuit radiator via the configuration screen. At the engine cooling radiator configure screen, the possible settings are displayed and can be updated. Initially, the user cannot change the write parameters since it is locked with level-1 (Operator) 'or' level-2 (Technician level) password.

Upon entering the level-1 and level-2 passwords by clicking on the "Lock" button available at the right-side bottom corner, the engine cooling radiator screen gets "Unlocked", and now the user allowed to update the values (See Figure 8.6).

To view and update the parameter values, the user can access the engine cooling radiator screen by navigating to:
Menu → Configure → Balance of Plant → Engine Cooling Radiator.

The following Figure 8.6 shows the engine cooling radiator configure screen. At the top right-side corner of the screen shortcut button is available to go to cooling circuits and heating circuit overview screen. The user needs to use scroll bar to view and edit all the data.

The controller supports the following configurable parameters relating to engine cooling circuit (radiator control) as mentioned in the Figure 8.6.

©2025 Caterpillar. All rights reserved.

Caterpillar: Confidential Green

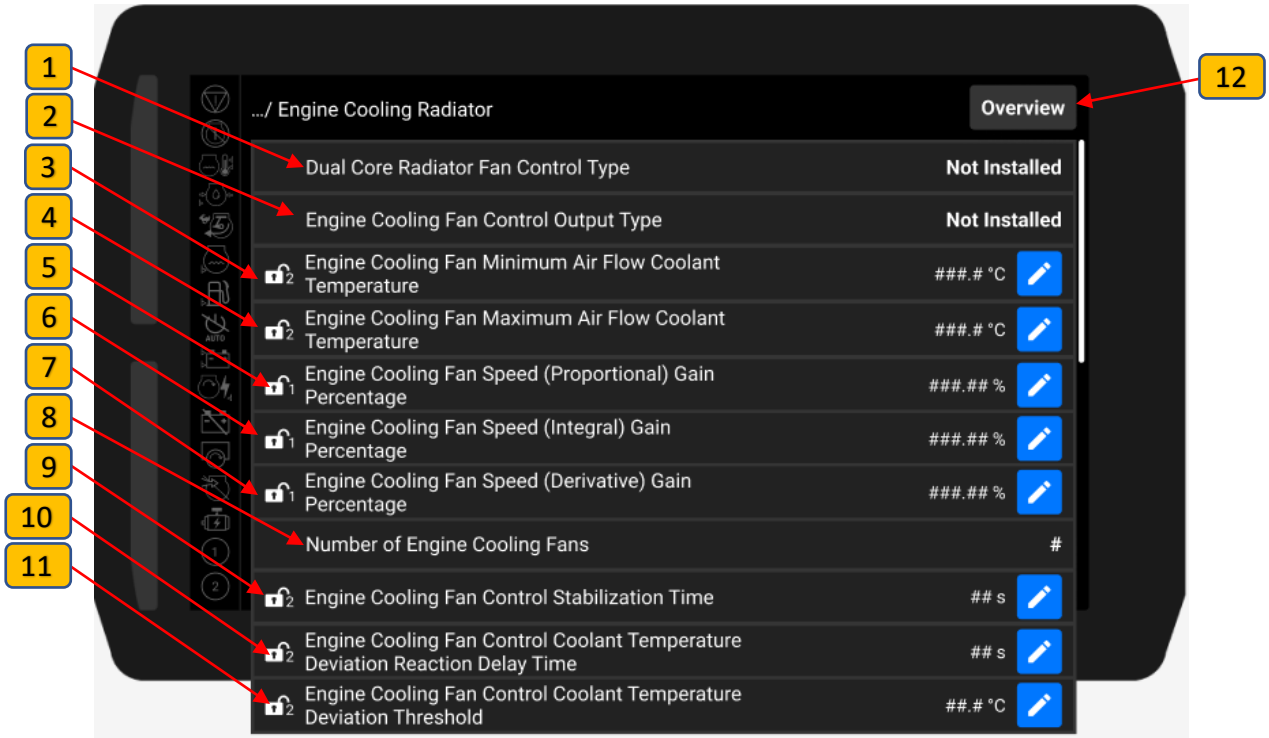

Figure 8.6 Engine Cooling Radiator Configure Screen

Note: When the user selects the "Edit" button it will pop-up a standard keypad as shown in Figure 5.8 to enter the desired value as per the table 8.12.

Table 8.12 Engine Cooling Radiator Configure Screen Parameters

Ref	Parameter Name	Unit	Access Level	Resolution	Range
1	Dual Core Radiator Fan Control Type	-	Observer	Not Installed On/Off 4-20mA Drive	-
2	Engine Cooling Fan Control Output Type	-	Observer	Not Installed On/Off 4-20mA	-
3	Engine Cooling Fan Minimum Air Flow Coolant Temperature	°C	Level 2	0.1	0 – 200 °C
4	Engine Cooling Fan Maximum Air Flow Coolant Temperature	°C	Level 2	0.1	0 – 200 °C
5	Engine Cooling Fan Speed (Proportional) Gain Percentage	%	Level 1	0.01	0 to 100 %
6	Engine Cooling Fan Speed (Integral) Gain Percentage	%	Level 1	0.01	0 to 100 %
7	Engine Cooling Fan Speed (Derivative) Gain Percentage	%	Level 1	0.01	0 to 100 %
8	Number of Engine Cooling Fans	-	Observer	1	1-8

©2025 Caterpillar. All rights reserved.

Caterpillar: Confidential Green

Ref	Parameter Name	Unit		Access Level	Resolution	Range
9	Engine Cooling Fan Control Stabilization Time	s		Level 2	1	0 - 60 s
10	Engine Cooling Fan Control Coolant Temperature Deviation Reaction Delay Time	s		Level 2	1	0 - 10 s
11	Engine Cooling Fan Control Coolant Temperature Deviation Threshold	°C		Level 2	0.1	1-10 °C
12	Shortcut to Cooling Circuits and Heating Circuit Overview Screen	-		-	-	-

©2025 Caterpillar. All rights reserved.

Caterpillar: Confidential Green

9.0 Dual Core Radiator

9.1 Functional Description

A dual core radiator is a combination of two radiators cores into a single radiator, which enables a smaller footprint but with a decreased control efficiency for the individual cooling circuits. Cooling performance for both HT circuit (engine cooling circuit (JWC)) and LT circuit (SCAC) are controlled via the same setpoint for radiator fan speed (via VFD or single speed stage fans). The inlet temperature controls in HT and LT cooling circuits via 3-way valves remain unchanged. The controlled variable is always the one with the greater deviation from the setpoint from both cooling circuits, thus requiring the higher cooling power. Therefore, the control variable switches between radiator engine circuit outlet temperature and radiator SCAC outlet temperature depending on genset load and ambient temperatures.

9.1.1 Operational Logic:

The dual core radiator control sequence is similar to the control of single-core radiators with only a minor adaptation. It's a single radiator control with a calculation of the control deviation based on two different control loops, i.e. two different setpoint/actual value pairs (see Figure 9.1). Apart from this change, the basic radiator control sequence for the dual core radiator is identical to the sequences already specified within the chapters of the single radiators (chapters separate circuit aftercooler and the engine cooling circuit).

Startup Phase:

- Genset start is initiated
  - Radiator Start Digital Output is Activated.

Warm-Up Phase:

- Radiator control (4-20mA) is controlled based on the radiator outlet temperature.

Normal Operation:

- Engine reaches optimal temperature.
- 3-way valve sends hot water to radiator.
- Radiator speed is regulated based on its outlet temperature (4-20mA).

Shutdown:

- Radiator outlet temperature regulation is stopped after the engine state has changed to "engine stopped" and "Separate Circuit Aftercooler Pump Deactivation Delay Time" has expired.

9.1.2 Flow Diagram: Dual Core Radiator For Power-Only Mode

Refer to the following figure 9.1.

1. Dual Core Radiator
2. Engine Circuit 3-Way Valve
3. Engine Circuit Pump
4. Separate Circuit Aftercooler 3-Way Valve
5. Separate Circuit Aftercooler Pump

©2025 Caterpillar. All rights reserved.

Caterpillar: Confidential Green

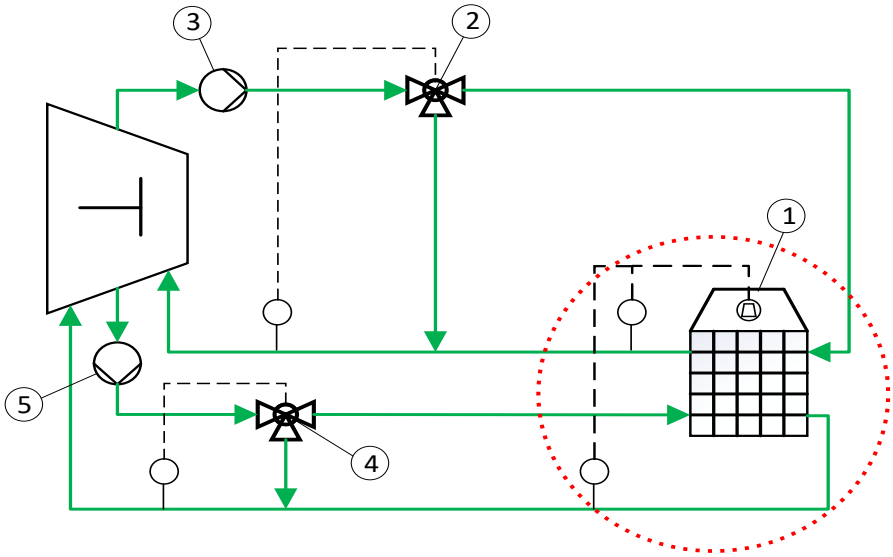

Figure 9.1 Dual Core Radiator Flow Diagram

9.2 Common Dual Core Radiator Control with VFD or Stage Switching

The following diagram shows the inputs and outputs for the different types of regulations

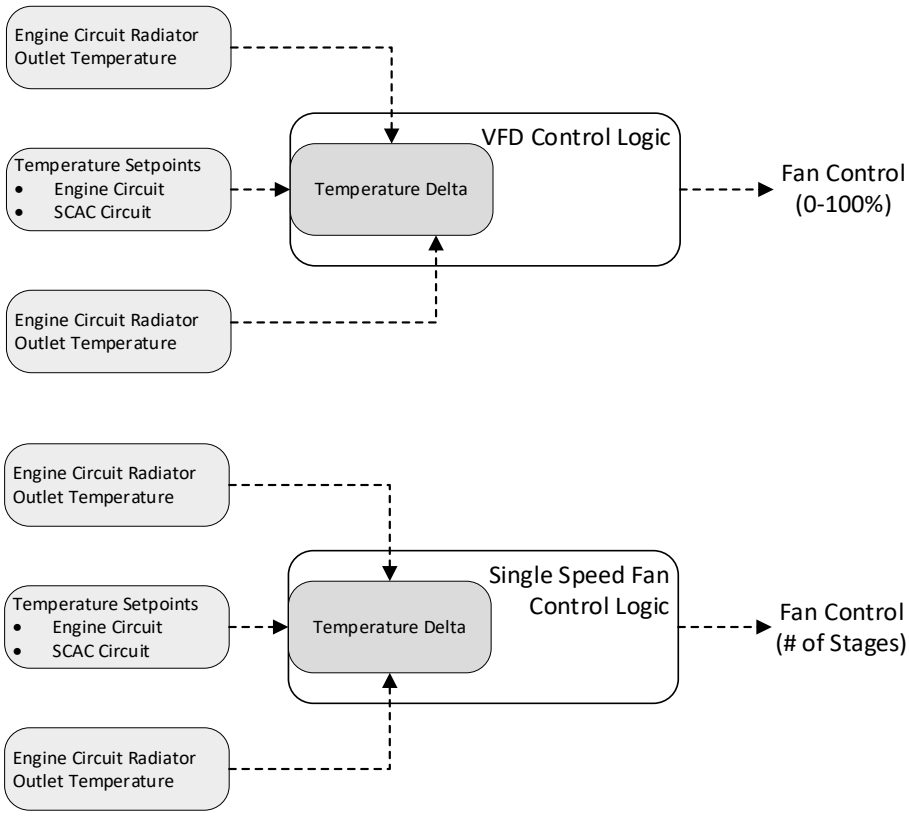

Figure 9.2 Dual Core Radiator with VFD or Staged Switching

©2025 Caterpillar. All rights reserved.

Caterpillar: Confidential Green

Basic radiator control sequence is similar to the control of single-core radiators mentioned in chapter 6 and chapter 8. Basically, it is just one radiator device with a calculation of the control deviation based on two different control loops, i.e. two different setpoints (See Figure 9.2).

9.2.1 Calculation of the Control Deviation

Control deviation computation is identical for both types of radiators (VFD controlled or Single speed fans).

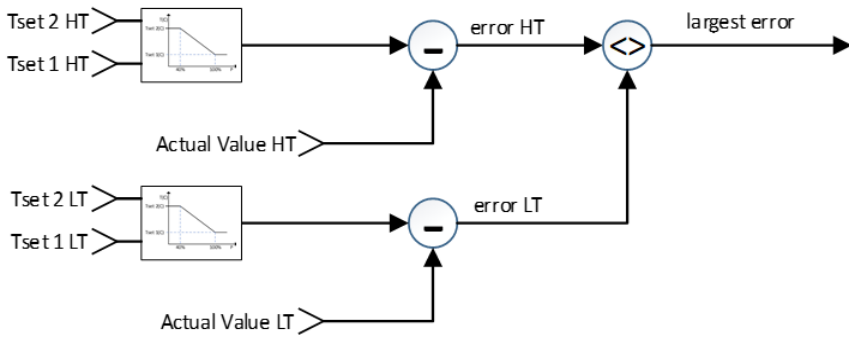

Figure 9.3 Control Deviation Calculation

For dual core radiators both outlet temperatures (HT and LT) have to be considered. The cooling circuit requiring higher cooling power, always controls the fan speed/number of stages, while the second circuit therefore is cooled to a lower temperature than required.

- If (T radiator HT outlet - T setpoint HT) > (T radiator LT outlet - T setpoint LT) then HT temperature is used for controlling cooling power
- If (T radiator outlet HT - T setpoint HT) < (T radiator outlet LT - T setpoint LT) then LT temperature is used for controlling cooling power
- If both ΔT are equal (or at setpoint), use ΔT_HT.

9.3 Control Setpoints

This subsection contains the complete collection of function-related parameters required to set-up and tune the control. The dual core radiator control has 3 sets of setpoints listed below:

1. General Dual Core Radiator Setpoints
2. VFD Controlled Radiator Setpoints
3. Staged Radiator Setpoints (Single Speed Fans)

Table 9.1 General Dual Core Radiator Setpoints

Parameter	Resolution	Unit	Range / Status
Dual Core Radiator Fan Control Type	-	-	Not Installed On/Off 4-20mA Drive
Engine Fuel #1 Minimum Desired Separate Circuit Aftercooler Radiator Outlet Temperature	0.1	°C	[0,200]

©2025 Caterpillar. All rights reserved.

Caterpillar: Confidential Green

Parameter	Resolution	Unit	Range / Status
Engine Fuel #1 Maximum Desired Separate Circuit Aftercooler Radiator Outlet Temperature	0.1	°C	[0,200]
Engine Cooling Fan Minimum Air Flow Coolant Temperature	0.1	°C	[0,200]
Engine Cooling Fan Maximum Air Flow Coolant Temperature	0.1	°C	[0,200]

Dual Core Radiator Fan Control Type
Used to read and program the type of fan control for the Dual Core Radiator. "4-20mA" = Analog speed control of the fan, “On/Off" = On/Off control of one or more fans.

Engine Fuel #1 Minimum Desired Separate Circuit Aftercooler Radiator Outlet Temperature
Used to read and program the minimum desired coolant temperature at the outlet of the Separate Circuit Aftercooler Radiator for Engine Fuel #1.

Engine Fuel #1 Maximum Desired Separate Circuit Aftercooler Radiator Outlet Temperature
Used to read and program the maximum desired coolant temperature at the outlet of the Separate Circuit Radiator Aftercooler for Engine Fuel #1.

Engine Cooling Fan Minimum Air Flow Coolant Temperature
Used to read and program the coolant temperature value at which the system requires the minimum engine cooling fan air flow. This is the temperature setpoint at minimum fan air flow, if the setpoint is not map based.

Engine Cooling Fan Maximum Air Flow Coolant Temperature
Used to read and program the coolant temperature value at which the system requires the maximum engine cooling fan air flow. This is the temperature setpoint at maximum fan air flow, if the setpoint is not map based.

Table 9.2 VFD Controlled Radiator Setpoints

Parameter	Resolution	Unit	Range/Status
Engine Cooling Fan Speed (Proportional) Gain Percentage <High Resolution>	0.01	%	[0,100]
Engine Cooling Fan Speed (Integral) Gain Percentage	0.01	%	[0,100]
Engine Cooling Fan Speed (Derivative) Gain Percentage	0.01	%	[0,100]

Table 9.3 Staged Radiator Setpoints (Single Speed Fans)

Parameter	Resolution	Unit	Range/Status
Number of Engine Cooling Fans	1	-	[1, 8]
Engine Cooling Fan Control Stabilization Time	1	Sec	[0,60]
Engine Cooling Fan Control Coolant Temperature Deviation Reaction Delay Time	1	Sec	[0,10]
Engine Cooling Fan Control Coolant Temperature Deviation Threshold	0.1	°C	[1,10]

Refer to chapter 8.4 for details about parameters mentioned in Table 9.2 and Table 9.3.

©2025 Caterpillar. All rights reserved.

Caterpillar: Confidential Green

9.4 Diagnostics and Feedback

9.4.1 Diagnostics

Dual core radiator uses the following diagnostic events defined in the single radiator chapters (section 6.5.1 and section 8.5.1) without renaming towards the dual core option:

From the chapter 6 - "Separate Circuit Aftercooler (Radiator Control)

- All events with Reference SPN 20821

From the chapter 8- "Engine Cooling Circuit (Radiator Control)

- All events with SPN 20811 and 20813

9.4.2 Status Events

The dual core radiator uses all available status events from the chapter 8 "Engine Cooling Circuit (Radiator Control)" without renaming. Refer to section 8.5.2 for details about status events related to dual core radiator.

9.4.3 Data Feedback

The dual core radiator control has 3 sets of data feedback listed below:

- Common Data Feedback
- VFD Controlled Radiator Data Feedback
- Staged Radiator (Single Speed Fans) Data Feedback

1. **Common Data Feedback:**
   From Table 9.1 if the parameter "Dual Core Radiator Fan Control Type" is not equal to "Not Installed" then it will support following data feedback:

   From the chapter 6 - "Separate Circuit Aftercooler (Radiator Control)
   - All general data feedback with SPN 20821 and 20822

   From the chapter 8- "Engine Cooling Circuit (Radiator Control)
   - All general data feedback with SPN 20811 and 20812

SPN	Name	Description	Unit
21160	Engine Radiator Temperature Control Selection Status	Indicates the active control temperature setpoint used to control the radiator. Engine Radiator 1 Control Temperature Engine Radiator 2 Control Temperature Error Not Available	-

2. **VFD Controlled Radiator Data Feedback:**
   From Table 9.1 if the parameter "Dual Core Radiator Fan Control Type" is equal to "4-20 mA" then it will support following data feedback:

   From the chapter 8- "Engine Cooling Circuit (Radiator Control)
   - All VFD controlled radiator data feedback with SPN 6730

©2025 Caterpillar. All rights reserved.

Caterpillar: Confidential Green

3. **Staged Radiator (Single Speed Fan) Data Feedback:**
   From Table 9.1 if the parameter "Dual Core Radiator Fan Control Type" is equal to "On/Off" then it will support following data feedback:

   From the chapter 8- "Engine Cooling Circuit (Radiator Control)
   - All Single Speed Fans controlled radiator data feedback with SPN 20813, 20814, 20815, 20816, 20817, 20818, 20819 and 20820

9.5 Inputs and Outputs

Dual core radiator reuses all the IOs from the SCAC radiator and engine cooling circuit radiator. All IO is covered in the following chapters:

From the chapter 6 - "Separate Circuit Aftercooler (Radiator Control)

- All IOs : Refer to section 6.6 of chapter 6.0

From the chapter 8- "Engine Cooling Circuit (Radiator Control)

- All IOs : Refer to section 8.6 of chapter 8.

9.6 HMI Display Requirements/Concepts

9.6.1 Dual Radiator Control Overview Parameters

Refer to the Separate Circuit Aftercool (Radiator Control) and Engine Cooling Circuit (Radiator Control) chapters for HMI overview screens.

©2025 Caterpillar. All rights reserved.

Caterpillar: Confidential Green

10.0 Customer Site Heating Circuit (3-Way Valve & Pump Control)

10.1 Functional description

In systems with heat recovery, the heat generated by the engine is transferred to the customer site heating circuit via a heat exchanger. This includes engine cooling water heat, and exhaust gas. The design of components and the control system should ensure a constant supply temperature to the customer heating circuit.

In addition to the heat exchangers, the main components in the customer side heating circuit integration are the circulating pump and the temperature sensors for the supply and return temperature from the customers cooling system.

To increase efficiency, heat transfer to the customer's heating circuit is used as the primary engine cooling circuit control. A secondary cooling circuit, independent of the customer site heating circuit, compensates for excessively high return temperatures and serves as a fallback system.

This chapter will focus on the general control logic for engine cooling using a 3-way valve for the engine cooling circuit and control of the pump in the customer site heating circuit. When the customer site heating circuit is installed then following regulation relevant sensors and actors have to be installed:

- In the heating circuit: Supply temperature sensor, the pump for the coolant flow.
- 3-Way valve either in the heating circuit or in the engine cooling circuit, depending on the user configuration.
- From the engine cooling circuit, the temperature of the engine coolant.

10.1.1 Operational Logic

The control of the radiator in Intercooler / SCAC is activated and deactivated together with the control of the Intercooler / SCAC 3-way valve and pump.

Startup Phase:

- Genset start is initiated
    - Pump and valve regulation is started
    - Valve location in engine cooling circuit: Warms up the engine by bypassing the customer heating loop.
    - Valve location in customer site heating circuit: Warms up the engine by bypassing the customer heat exchanger.
    - Pump circulates coolant through engine only.

Warm-Up Phase:

- Temperature rises.
- Valve begins to mix flow between bypass and customer heating loop.
- Pump maintains flow rate.

©2025 Caterpillar. All rights reserved.

Caterpillar: Confidential Green

Normal Operation:

- Engine reaches optimal temperature.
- Heating Circuit supply flow temperature control is based on temperature flowing to the customer loop to modify the setpoint of the engine cooling circuit temperature. The control regulates the temperature by adjusting the engine temperature setpoint.
- Pump maintains steady flow.

Shutdown:

- Pump and valve regulation is stopped after the engine state has changed to “engine stopped” and “Separate Circuit Aftercooler Pump Deactivation Delay Time” has expired.

10.1.2 Flow Diagram: Customer Heating Circuit With Cooling Water Heat Exchanger

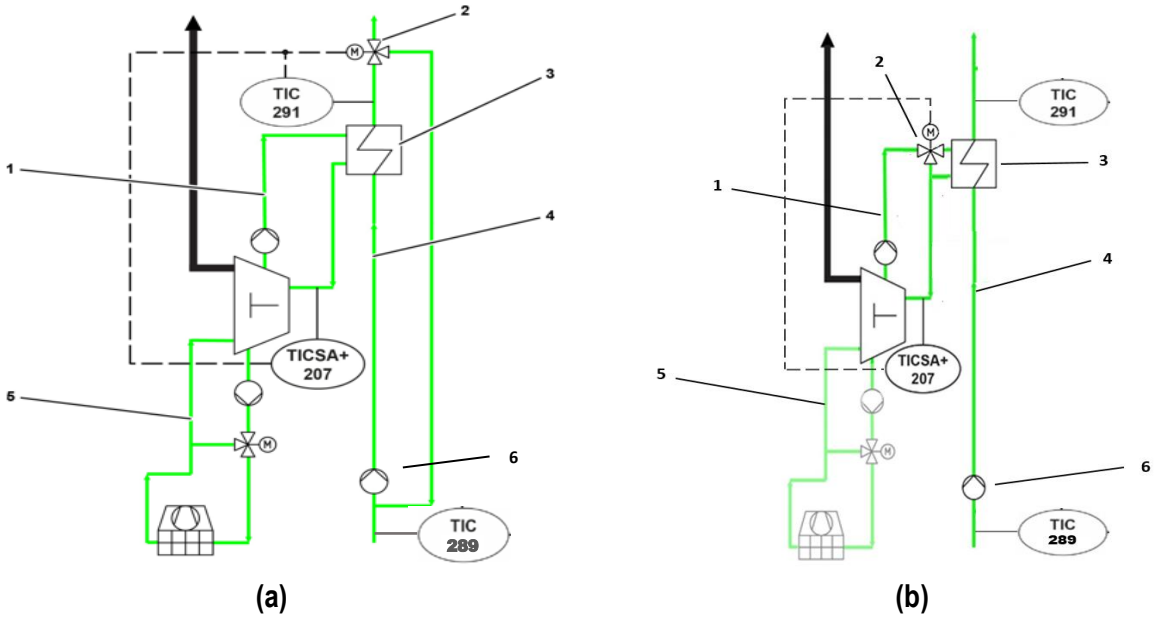

Figure 10.1 Heating Circuit 3-Way Valve (a) In the Heating Circuit; (b) In the Engine Cooling Circuit

1. Engine cooling circuit
2. 3-way valve Customer Heating Circuit
3. Cooling water heat exchanger
4. Customer Heating Circuit
5. Intercooler / SCAC
6. Pump

10.2 3-Way Valve Control

If there is a heating circuit configured, i.e. when the engine heat is transferred to the heating circuit, the heating circuit 3-way valve control serves as the primary engine cooling circuit control. The control sequence of the regulation is identical to the definition in chapter 7.0 “Engine Cooling Circuit: (3-Way Valve & Pumps)”.

©2025 Caterpillar. All rights reserved.

Caterpillar: Confidential Green

The temporarily higher heat transfer efficiency of a new heat exchanger (and thus an exceeding of the agreed flow temperature) can be compensated by reducing the engine coolant setpoint temperature. Regulation depends on the installation location of the customer site heating circuit 3-way valve, as defined below.

10.2.1 Customer Site Heating Circuit 3-Way Valve is Installed in the Heating Circuit

If the customer circuit outlet temperature of the customer heating circuit exceeds its configured limit value, the heat transfer from the engine cooling circuit to the heating circuit is reduced by lowering the coolant temperature in the engine cooling circuit. For this purpose, the current setpoint of the engine coolant temperature is slowly reduced by up to 10Kelvin via a PID controller

10.2.2 Customer Site Heating Circuit 3-Way Valve is Installed in the Engine Cooling Circuit

The concept of HC flow temperature limitation by engine cooling circuit temperature setpoint regulation must not be applied if the 3-way valve is installed in the engine cooling circuit.

10.3 Pump Control

Customer site heating circuit pump control is identical to the definition in section 7.3 “Pump Control” under chapter 7.0 “Engine Cooling Circuit (3-Way Valve & Pumps)”.

10.4 Control Setpoints

This subsection contains the complete collection of function-related parameters required to set-up and tune the control.

Table 10.1 Customer Site Heating Circuit 3-Way Valve and Pump Control Common Setpoints

Parameter	Resolution	Unit	Range / Status
Customer Heating Circuit Installation Status	-	-	Installed Not Installed
Heating Circuit Pump Deactivation Delay Time Post Engine Stop	1	sec	[0,3600]
Customer Heating Circuit Control Valve Location	-	-	Customer Heating Circuit Engine Cooling Circuit
Heating Circuit Pump Diagnostic Response Configuration	-	-	Warning, Soft Shutdown
Customer Heating Circuit Valve Control (Proportional) Gain Percentage	0.01	%	[0,100]
Customer Heating Circuit Valve Control (Integral) Gain Percentage	0.01	%	[0,100]
Customer Heating Circuit Valve Control (Derivative) Gain Percentage	0.01	%	[0,100]
Heating Circuit Outlet Coolant Temperature Minimum Input Value	0.1	°C	[0,200]
Heating Circuit Outlet Coolant Temperature Maximum Input Value	0.1	°C	[0,200]
Heating Circuit Inlet Coolant Temperature Minimum Input Value	0.1	°C	[0,200]
Heating Circuit Inlet Coolant Temperature Maximum Input Value	0.1	°C	[0,200]

©2025 Caterpillar. All rights reserved.

Caterpillar: Confidential Green

Customer Heating Circuit Installation Status
Used to read and program the installation status of the heating circuit

Heating Circuit Pump Deactivation Delay Time Post Engine Stop
Used to read and program the amount of time the heating circuit pump runs after the engine is stopped.

Customer Heating Circuit Control Valve Location
Used to read and program the location of the heating circuit control valve.

Heating Circuit Pump Diagnostic Response Configuration
Used to read and program the desired system response to a Heating Circuit Pump diagnostic.

Customer Heating Circuit Valve Control (Proportional) Gain Percentage
Used to read and program the proportional gain for a PID controller used to control the heating circuit valve position as an absolute percentage of factory set proportional gain.

Customer Heating Circuit Valve Control (Integral) Gain Percentage
Used to read and program the integral gain for a PID controller used to control the customer heating circuit valve position as an absolute percentage of factory set integral gain.

Customer Heating Circuit Valve Control (Derivative) Gain Percentage
Used to read and program the derivative gain for a PID controller used to control the customer heating circuit valve position as an absolute percentage of factory set derivative gain.

Heating Circuit Outlet Coolant Temperature Minimum Input Value
Used to read and program the Heating Circuit Outlet Coolant Temperature that corresponds to the minimum input value. (Reference SPN 20859 Heating Circuit Outlet Coolant Temperature). For example, for a current loop sensor, the minimum input value is the value to be used when the sensor is outputting 4mA.

Heating Circuit Outlet Coolant Temperature Maximum Input Value
Used to read and program the Heating Circuit Outlet Coolant Temperature that corresponds to the maximum input value. (Reference SAE SPN 20859 Heating Circuit Outlet Coolant Temperature). For example, for a current loop sensor, the maximum input value is the value to be used when the sensor is outputting 20mA.

Heating Circuit Inlet Coolant Temperature Minimum Input Value
Used to read and program the Heating Circuit Inlet Coolant Temperature that corresponds to the minimum input value. (Reference SPN 20860 Heating Circuit Inlet Coolant Temperature). For example, for a current loop sensor, the minimum input value is the value to be used when the sensor is outputting 4mA.

Heating Circuit Inlet Coolant Temperature Maximum Input Value
Used to read and program the Heating Circuit Inlet Coolant Temperature that corresponds to the maximum input value. (Reference SPN 20860 Heating Circuit Inlet Coolant Temperature). For example, for a current loop sensor, the maximum input value is the value to be used when the sensor is outputting 20mA.

Note: As per Engine Cooling Circuit Temperature Setpoint Regulation – If the “Customer Heating Circuit Installation Status” value is “installed” AND “Customer Heating Circuit Control Valve Location” value indicating “Customer Heating Circuit” then the following setpoints apply:

©2025 Caterpillar. All rights reserved.

Caterpillar: Confidential Green

Table 10.2 Customer Site Heating Circuit 3-Way Valve and Pump Control Regulation Setpoints

Parameter	Resolution	Unit	Range / Status
Desired Customer Heating Circuit Outlet Coolant Temperature	0.1	°C	[0,200]
Customer Heating Circuit Engine Block Intake Coolant Temperature Offset (Proportional) Gain	0.01	%	[0,100]
Customer Heating Circuit Engine Block Intake Coolant Temperature Offset (Integral) Gain	0.01	%	[0,100]
Customer Heating Circuit Engine Block Intake Coolant Temperature Offset (Derivative) Gain	0.01	%	[0,100]

Desired Customer Heating Circuit Outlet Coolant Temperature
Used to read and program the desired outlet temperature for the coolant in the Heating Circuit.

Customer Heating Circuit Engine Block Intake Coolant Temperature Offset (Proportional) Gain
Used to read and program the proportional gain for a PID controller used to control the heating circuit temperature by adjusting the engine block intake coolant temperature offset as an absolute percentage of factory set proportional gain. Effective Gain = (Gain) Percentage / 100 x Factory Setting (Gain).

Customer Heating Circuit Engine Block Intake Coolant Temperature Offset (Integral) Gain
Used to read and program the integral gain for a PID controller used to control the heating circuit temperature by adjusting the engine block intake coolant temperature offset as an absolute percentage of factory set Integral gain. Effective Gain = (Gain) Percentage / 100 x Factory Setting (Gain).

Customer Heating Circuit Engine Block Intake Coolant Temperature Offset (Derivative) Gain
Used to read and program the derivative gain for a PID controller used to control the heating circuit temperature by adjusting the engine block intake coolant temperature offset as an absolute percentage of factory set Derivative gain. Effective Gain = (Gain) Percentage / 100 x Factory Setting (Gain).

10.5 Diagnostics and Feedback

10.5.1 Diagnostics

The following table defines the diagnostics events associated with this feature:

Table 10.3 Customer Heating Circuit 3-Way Valve & Pump Control Diagnostics Events

SPN	Name	FMI	ERC	Description	Delay	Pre-Condition Delay
20859	Heating Circuit Supply Outlet Coolant Temperature	1	Soft Shutdown	Heating Circuit Supply Outlet Coolant Temperature sensor error (current/signal level below normal range)	300s	0s
20859	Heating Circuit Supply Outlet Coolant Temperature	0	Soft Shutdown	Heating Circuit Supply Outlet Coolant Temperature sensor error (current / signal level above normal range)	300s	0s

©2025 Caterpillar. All rights reserved.

Caterpillar: Confidential Green

SPN	Name	FMI	ERC	Description	Delay	Pre-Condition Delay
20859	Heating Circuit Supply Outlet Coolant Temperature	18	Warning	Heating Circuit Supply Outlet Coolant Temperature sensor error (current/signal level below normal range)	500ms	0s
20859	Heating Circuit Supply Outlet Coolant Temperature	16	Warning	Heating Circuit Supply Outlet Coolant Temperature sensor error (current / signal level above normal range)	500ms	0s
20859	Heating Circuit Supply Outlet Coolant Temperature	7	Soft Shutdown	Heating Circuit Supply Outlet Coolant Temperature sensor is missing (not responding properly / no sensor value due to IO-terminal error)	300s	0s
20859	Heating Circuit Supply Outlet Coolant Temperature	12	Warning	Heating Circuit Supply Outlet Coolant Temperature sensor error (not responding properly / no sensor value due to IO-terminal error)	500ms	0s
20860	Heating Circuit Return Coolant Temperature	18	Warning (User acknowledgeable)	Heating Circuit Return Coolant Temperature sensor error (current/signal level below normal range)	500ms	0s
20860	Heating Circuit Return Coolant Temperature	16	Warning (User acknowledgeable)	Heating Circuit Return Coolant Temperature sensor error (current / signal level above normal range)	500ms	0s
20860	Heating Circuit Return Coolant Temperature	12	Warning (User acknowledgeable)	Heating Circuit Return Coolant Temperature sensor error (not responding properly / no sensor value due to IO-terminal error)	500ms	0s
20864	Heating Circuit Pump Control	11	User configurable (Heating Circuit Pump Diagnostic Response Configuration)	Heating Circuit Pump failed	0s	0s
20863	Heating Circuit Differential Pressure Switch Status	1	Hard Shutdown	Engine Coolant Differential Pressure too low	3s	30s

10.5.2 Status Events

The following table defines the status events associated with this feature:

©2025 Caterpillar. All rights reserved.

Caterpillar: Confidential Green

Table 10.4 Customer Heating Circuit 3-Way Valve & Pump Control Status Events

Name	Description	Ref. SPN	Reference Datapoint	Delay	Pre-Condition Delay
Heating circuit control valve limit position switch cold (open) activated	Digital Input for the Heating Circuit control valve limit stop COLD. This digital input identifies that the valve is now fully open to provide the maximum amount of cooling for the engine.	20862	Heating Circuit Thermostat Opening	3s	0s
Heating Circuit control valve limit position switch COLD (OPEN) Deactivated	Digital Input for Heating Circuit control valve limit stop COLD. This indicates that the valve is no longer fully open and is in a mixing position.	20862	Heating Circuit Thermostat Opening	3s	0s
Heating Circuit control valve limit position switch WARM (CLOSED) Activated	Digital Input for Heating Circuit control valve limit stop WARM. This digital input identifies that the valve is now fully closed to provide maximum heat to the engine.	20862	Heating Circuit Thermostat Opening	3s	0s
Heating Circuit control valve limit position switch WARM (CLOSED) Deactivated	Digital Input for Heating Circuit for separate circuit aftercooler control valve limit stop WARM. This indicates that the valve is no longer fully closed and is in a mixing position.	20862	Heating Circuit Thermostat Opening	3s	0s
Heating Circuit Pump start command enabled	Indicates that the Heating Circuit Pump enable signal has been activated.	20864	Heating Circuit Pump Control	0s	0s
Heating Circuit Pump Control start command disabled	Indicates that the Heating Circuit Pump enable signal has been deactivated.	20864	Heating Circuit Pump Control	0s	0s

10.5.3 Data Feedback

The following table defines the data feedback associated with this feature:

Table 10.5 Customer Heating Circuit 3-Way Valve & Pump Control Data Feedback

SPN	Name	Description	Unit
20862	Heating Circuit Thermostat Opening	Indicates the position of the heating circuit control valve. 0% represents the thermostat allows flow to completely bypass heat emission and 100% represents the flow is fully directed towards heat emission	%
20861	Desired Heating Circuit Thermostat Opening	Indicates the desired position of the heating circuit control valve. 0% represents the thermostat allows flow to completely bypass heat emission and 100% represents the flow is fully directed towards heat emission	%
20859	Heating Circuit Supply Outlet Coolant Temp	Temperature of the liquid found at the outlet of the unit's customer heating circuit (flow temperature).	°C
20860	Heating Circuit Return Coolant Temp	Temperature of the liquid found at the inlet of the unit's customer heating circuit (return temperature).	°C
20864	Heating Circuit Pump Control	"Control setting for an electrically actuated customer site heating circuit pump. Off; On; Reserved; Don't care / take no action	-

©2025 Caterpillar. All rights reserved.

Caterpillar: Confidential Green

10.6 Inputs and Outputs

The following table defines the hardware IO signals required for customer site heating circuit 3-way valve and pump control.

Table 10.6 Customer Heating Circuit 3-Way Valve & Pump Control I/O Signals

Descriptive Name	Status	DI	DO	AI (4-20mA)	AO (4-20mA)
Heating Circuit Pump Start	24V = On		X		
Heating Circuit Pump Failed Indicator	Open = Fault	X			
Heating Circuit Differential Pressure Switch	Open = Fault	X			
Heating Circuit Outlet Coolant Temperature	Configurable			X	
Heating Circuit Inlet Coolant Temperature	Configurable			X	
Heating Circuit 3-Way Valve Control	0-100%				X
Heating Circuit 3-Way Valve Opening at 0 % heat export	24V = 0%	X			
Heating Circuit 3-Way Valve Opening at 100 % heat export	24V = 100%	X			

10.7HMI Display Requirements/Concepts

The controller supports the following visualizations and configurations relating to customer site heating circuit (3-way valve and pump control).

10.7.1 Customer Site Heating Circuit Overview Parameters

The customer site heating circuit 3way valve and pump control parameters can be seen from the “Cooling Circuits and Heating Circuit” overview screen. This screen should be accessible through the menu location within the HMI navigation similar to section 7.7.1.

Menu → Overviews → Balance of Plant → Cooling Circuits and Heating Circuit.

The following Figure 10.2 shows the engine cooling circuits and heating circuit overview screen and the highlighted section refers to the heating circuit related parameters. Refer to section 7.7.1 for other details such as navigation etc.

Note: This section only covers the parameters associated with Heating Circuits as highlighted in the figure 10.2. For the details about parameters associated with other engine colling circuit and heating circuit refer to related sections within this manual.

Note: The show/hide rules for this section of parameters will remain same as mentioned in the section 5.7.1 “SCAC Valve Control Overview Parameters”. Hence it is not explicitly explained in this section.

©2025 Caterpillar. All rights reserved.

Caterpillar: Confidential Green

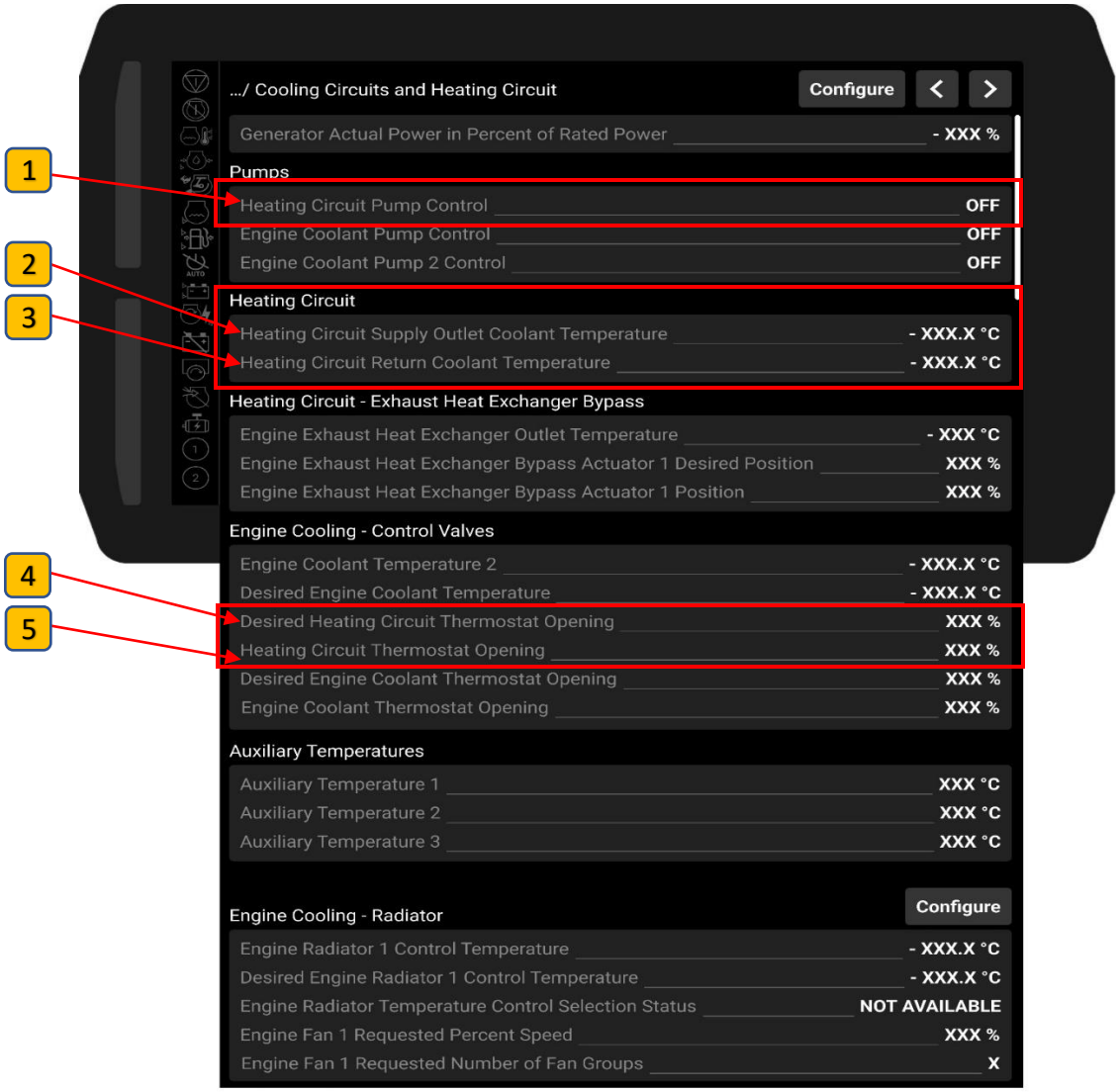

Figure 10.2 Cooling Circuits and Heating Circuit Overview Screen – Heating Circuit Parameters

The following table describes the unit and ranges associated with each parameter.

Table 10.7 Cooling Circuits and Heating Circuit Overview Screen – Heating Circuit Parameters

Ref	Parameter Name	Unit	Valid Data Range
1	Heating Circuit Pump Control	-	Off On Reserved Don't Care / take no action
2	Heating Circuit Supply Outlet Coolant Temperature	°C	-273 to 1735 °C
3	Heating Circuit Return Coolant Temperature	°C	-273 to 1735 °C
4	Desired Heating Circuit Thermostat Opening	%	0 to 100%
5	Heating Circuit Thermostat Opening	%	0 to 100%

©2025 Caterpillar. All rights reserved.

Caterpillar: Confidential Green

10.7.2 Customer Heating Circuit User Configurable Parameters

The HMI has the ability to configure parameters associated with customer site heating circuit (3-valve and pump control) via the engine cooling circuit and heating circuit configuration screen. All the possible settings related to heating circuit (valve control) are being displayed in this configure screen and can be updated.

Initially, the user cannot change the write parameters since it is locked with level-1 (Operator) 'or' level-2 (Technician level) password. Upon entering the level-1 and level-2 passwords by clicking on the "Lock" button available at the right-side bottom corner, the engine cooling circuit and heating circuit screen gets "Unlocked", and now the user allowed to update the values (See Figure 6.6).

To view and update the parameter values, the user can access the configure screen by navigating to:
Menu → Configure → Balance of Plant → Engine Cooling Circuit and Heating Circuit.

The following Figure 10.3 shows the engine cooling circuit and heating circuit configure screen. At the top right-side corner of the screen shortcut button is available to go to cooling circuits and heating circuit overview screen. The user needs to use scroll bar to view and edit the data.

Note: The highlighted parameters in the Figure 10.3 are related to heating circuit (valve control) and are described in this section. However, for other parameter details refer to related section of this manual.

For show/hide rules and other details refer to section 5.7.2.

Note: In the Figure 10.3 when the user selects the "Edit" button it will pop-up a standard keypad as shown in Figure 5.8 to enter the desired value.

Note: Parameter "**Customer Heating Circuit Control Valve Location**" is the view only and the user cannot edit the settings of this parameter using HMI screen.

The controller supports the following configurable parameters relating to heating circuits as highlighted in the Figure 10.3.

©2025 Caterpillar. All rights reserved.

Caterpillar: Confidential Green

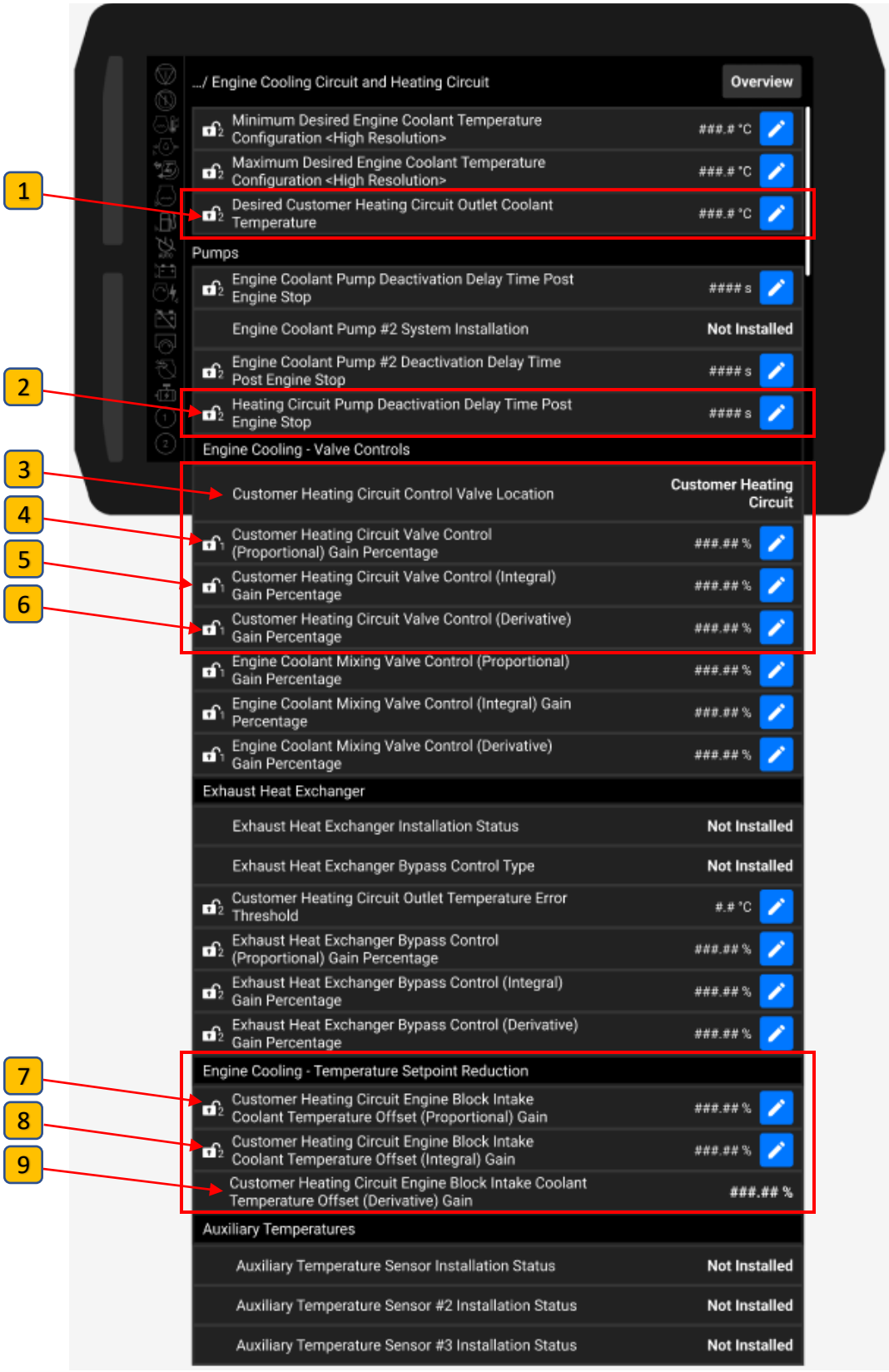

Figure 10.3 Engine Cooling Circuit and Heating Circuit Configure Screen - Heating Circuit Parameters

©2025 Caterpillar. All rights reserved.

Caterpillar: Confidential Green

The following table describes the unit and ranges associated with each parameter.

Table 10.8 Engine Cooling Circuit and Heating Circuit Configure Screen -Heating Circuit Parameters

Ref	Parameter Name	Unit	Access Level	Resolution	Range
1	Desired Customer Heating Circuit Outlet Coolant Temperature	°C	Level 2	0.1	0 - 200 °C
2	Heating Circuit Pump Deactivation Delay Time Post Engine Stop	s	Level 2	1	0 to 3600 s
3	Customer Heating Circuit Control Valve Location	-	Observer	-	Customer Heating Circuit Engine Cooling Circuit
4	Customer Heating Circuit Valve Control (Proportional) Gain Percentage	%	Level 1	0.01	0 to 100 %
5	Customer Heating Circuit Valve Control (Integral) Gain Percentage	%	Level 1	0.01	0 to 100 %
6	Customer Heating Circuit Valve Control (Derivative) Gain Percentage	%	Level 1	0.01	0 to 100 %
7	Customer Heating Circuit Engine Block Intake Coolant Temperature Offset (Proportional) Gain	%	Level 2	0.01	0 to 100 %
8	Customer Heating Circuit Engine Block Intake Coolant Temperature Offset (Integral) Gain	%	Level 2	0.01	0 to 100 %
9	Customer Heating Circuit Engine Block Intake Coolant Temperature Offset (Derivative) Gain	%	Observer	0.01	0 to 100 %

©2025 Caterpillar. All rights reserved.

Caterpillar: Confidential Green

11.0 Exhaust Heat Exchanger Bypass with Customer Site Heating Circuit

11.1 Functional Description

An exhaust heat exchanger is used to extract part of the heat energy from the engine's exhaust gas. The energy is then available to provide additional heat to the customer heating circuit temperature.

The exhaust heat exchanger can be arranged both in the engine cooling circuit or directly in the customer heating circuit. If arranged in the engine cooling circuit, the heat energy is first transferred to the engine cooling circuit and then to the customer heating circuit in the cooling water heat exchanger. If arranged in the customer heating circuit, the heat energy is directly transferred to the customer heating circuit.

Optionally, an exhaust gas bypass valve control can be integrated to stabilize the supply temperature at the required temperature setpoint depending on the upstream disturbances. Typically, two valves are installed, which are connected to one another to be operated by one actuator. Opening the heat exchanger valve closes the bypass valve and vice versa.

When the exhaust gas valve is in position “Open” (bypass is "closed"), the hot exhaust gas flow is completely routed through the exhaust gas heat exchanger, which indicates maximum heating of the exhaust gas heat exchanger, i.e. maximum utilization of the exhaust gas heat for the heating circuit. When the exhaust valve is in position “Closed” (bypass is opened), the hot exhaust gas flow is reduced to the point of completely bypassing the exhaust gas heat exchanger which means no heat utilization in the exhaust gas heat exchanger.

11.1.1 Operational Logic

The exhaust gas bypass control makes it possible to reduce the exhaust gas heat transfer to the customer heating circuit respectively to maintain the customer circuit outlet temperature at the desired temperature level.

If the outlet temperature of the customer heating circuit exceeds its configured limit plus a configurable temperature offset, the exhaust gas valve must be closed further (i.e. bypass is opened further) to reduce the heat transfer from the exhaust gas towards the heating circuit and vice versa.

PID Controller:

The PID controller is used to adjust and control the responsiveness of the exhaust bypass valves to correct the supply flow temperature to match the calculated temperature setpoint. The PID controller has three configurable setpoints for proportional gain, integral gain and derivative gain and incorporated with anti-windup protection to prevent integral windup.

The output of the PID Loop is a relative value (e.g. 0 – 100%) that can be used to drive the exhaust gas valve. (100 % indicates maximal opening, or maximal duty cycle towards end position “Open”.

- Offset for the supply flow temperature setpoint, The value is added to the setpoint of HC module to avoid interference between the controllers.
- Flap Controller Proportional Gain: A value of 100% means that difference between actual temperature and its setpoint of +/- 1°C leads to fully closed or fully opened flap, if both other parameters are set to 0%.

©2025 Caterpillar. All rights reserved.

Caterpillar: Confidential Green

- Flap Controller Integral Gain: A value of 100% means that an integral of the difference between actual temperature and its setpoint of +/- 1°Cs leads to fully closed or fully opened flap, if both other parameters are set to 0%.
- Flap Controller Derivative Gain: A value of 100% means that a derivate of the difference between actual temperature and its setpoint of +/- 1°C/s leads to fully closed or fully opened flap, if both other parameters are set to 0%.

11.1.2 Flow diagram: Exhaust Heat Exchanger Scenarios

Example scenarios are shown to illustrate how the exhaust gas heat exchangers may be integrated in the CHP installation, with and without bypass, regardless of the installation details required to ensure cooling of the engine.

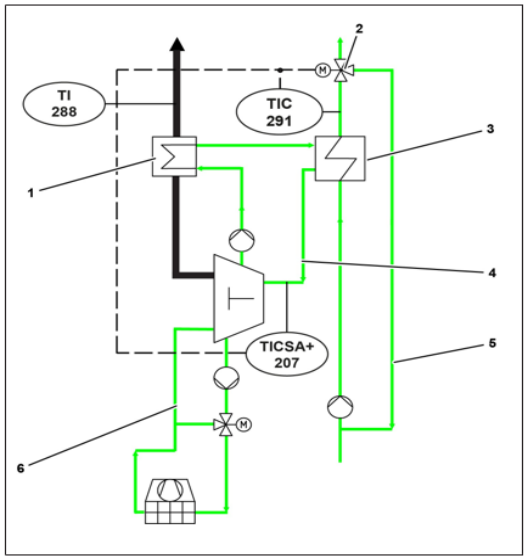

(a)

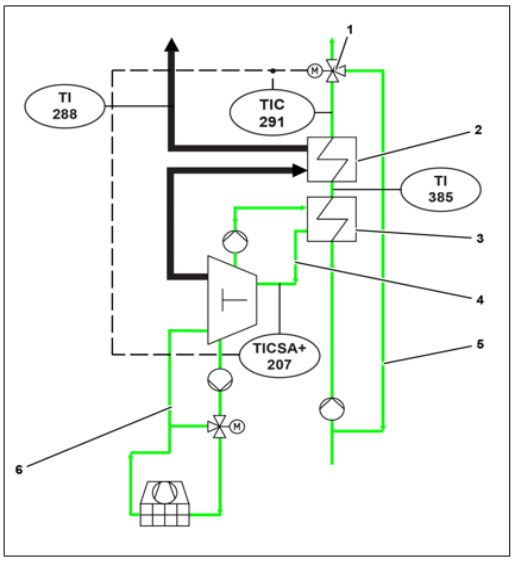

(b)

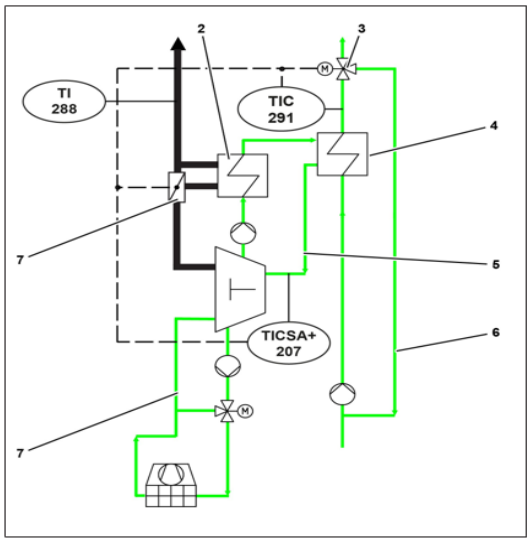

(c)

Figure 11.1 Customer Heating Circuit with Exhaust Heat Exchanger

©2025 Caterpillar. All rights reserved.

Caterpillar: Confidential Green

In Figure 11.1

(a) Customer Heating Circuit with EHE without bypass in engine cooling circuit

(b) Customer Heating Circuit with EHE without bypass in Customer Heating Circuit

(c) Customer Heating Circuit with one example of an EHE with bypass in engine cooling circuit

11.2 Exhaust Gas Valves Control

The position of this valve type is controlled by a 4-20mA setpoint directly. Therefore, the output of the PID controller (0-100 %) can be connected directly to the valve via a configurable 4-20mA output. (Default: 4 mA: 0%, 20 mA: 100%)

End position sensors

Since control logic needs to know when the valve is at one of its two stop positions, end position sensors must be available and connected to two digital inputs for the fully open and closed positions. Movements into the direction of the end position should be suppressed.

The current position is expressed from the status of the digital inputs by three states: no heat utilization (0% = exhaust gas valve is closed / bypass is opened), in between (50%), maximal heat utilization (100% = exhaust gas valve is open / bypass is closed).

11.3 Control Setpoints

This subsection contains the complete collection of function-related parameters required to set-up and tune the control.

Table 11.1 Customer Heating Circuit with Exhaust Heat Exchanger Setpoints

Parameter	Resolution	Unit	Range / Status
Exhaust Heat Exchanger Installation Status	-	-	Not Installed Customer Heating Circuit Engine Cooling Circuit
Exhaust Heat Exchanger Outlet Gas Temperature Sensor Installation Status	-	-	Installed Not Installed
Engine Low Load Exhaust Heat Exchanger Outlet Gas Temperature Threshold	1	°C	[0,800]
Engine Full Load Exhaust Heat Exchanger Outlet Gas Temperature Threshold	1	°C	[0,800]
Engine Exhaust Gas Temperature After Exhaust Heat Exchanger Minimum Input Value	0.1	°C	[0,1000]
Engine Exhaust Gas Temperature After Exhaust Heat Exchanger Maximum Input Value	0.1	°C	[0,1000]
Exhaust Heat Exchanger Bypass Control Type	-	-	Not Installed. 4-20mA;
Customer Heating Circuit Outlet Temperature Error Threshold	0.1	°C	[0,5]
Exhaust Heat Exchanger Bypass Control (Proportional) Gain %	0.01	%	[0,100]
Exhaust Heat Exchanger Bypass Control (Integral) Gain %	0.01	%	[0,100]
Exhaust Heat Exchanger Bypass Control (Derivative) Gain %	0.01	%	[0,100]

©2025 Caterpillar. All rights reserved.

Caterpillar: Confidential Green

Exhaust Heat Exchanger Installation Status
Used to read and program the installation status of the exhaust heat exchanger.

Exhaust Heat Exchanger Outlet Gas Temperature Sensor Installation Status
Used to read and program the installation status of the exhaust heat exchanger outlet gas temperature sensor.

Engine Low Load Exhaust Heat Exchanger Outlet Gas Temperature Threshold
Used to read and program the exhaust heat exchanger outlet gas temperature threshold at low engine load.

Engine Full Load Exhaust Heat Exchanger Outlet Gas Temperature Threshold
Used to read and program the exhaust heat exchanger outlet gas temperature threshold at full engine load.

Engine Exhaust Gas Temperature After Exhaust Heat Exchanger Minimum Input Value
Used to read and program the engine exhaust gas temperature after exhaust heat exchanger that corresponds to the minimum input value. For example, for a current loop sensor, the minimum input value is the value to be used when the sensor is outputting 4mA.

Engine Exhaust Gas Temperature After Exhaust Heat Exchanger Maximum Input Value
Used to read and program the Engine Exhaust Gas Temperature After Exhaust Heat Exchanger that corresponds to the maximum input value. For example, for a current loop sensor, the maximum input value is the value to be used when the sensor is outputting 20mA.

Exhaust Heat Exchanger Bypass Control Type
Used to read and program the type of exhaust bypass control for the exhaust heat exchanger.

Customer Heating Circuit Outlet Temperature Error Threshold
Used to read and program the temperature error threshold between actual and desired customer heating circuit outlet coolant temperatures, which triggers the activation or deactivation of the exhaust bypass control.

Exhaust Heat Exchanger Bypass Control (Proportional) Gain Percentage
Used to read and program the proportional gain for a PID controller used to control the Exhaust Heat Exchanger bypass valve position as an absolute percentage of factory set proportional gain. Effective Gain = (Gain) Percentage / 100 x Factory Setting (Gain).

Exhaust Heat Exchanger Bypass Control (Integral) Gain Percentage
Used to read and program the integral gain for a PID controller used to control the exhaust heat exchanger bypass valve position as an absolute percentage of factory set integral gain. Effective Gain = (Gain) Percentage / 100 x Factory Setting (Gain).

Exhaust Heat Exchanger Bypass Control (Derivative) Gain Percentage
Used to read and program the derivative gain for a PID controller used to control the exhaust heat exchanger bypass valve position as an absolute percentage of factory set derivative gain. Effective Gain = (Gain) Percentage / 100 x Factory Setting (Gain).

©2025 Caterpillar. All rights reserved.

Caterpillar: Confidential Green

Note: The setpoints for the supply flow temperature are already defined for the "Engine Cooling Circuit Temperature Setpoint". (Refer to chapter 10 "Customer Site Heating Circuit (3-Way Valve & Pump Control)").

11.4Diagnostics and Feedback

11.4.1 Diagnostics

The following table defines the diagnostics events associated with this feature:

Table 11.2 Customer Heating Circuit with Exhaust Heat Exchanger Diagnostics Events

SPN	Name	FMI	ERC	Description	Delay	Pre-Condition Delay
20850	Engine Exhaust Heat Exchanger Outlet Temperature	1	Soft Shutdown	Engine Exhaust Heat Exchanger Outlet Temperature sensor error (current/signal level below normal range)	300s	0s
20850	Engine Exhaust Heat Exchanger Outlet Temperature	0	Soft Shutdown	Engine Exhaust Heat Exchanger Outlet Temperature sensor error (current / signal level above normal range)	300s	0s
20850	Engine Exhaust Heat Exchanger Outlet Temperature	18	Warning	Engine Exhaust Heat Exchanger Outlet Temperature sensor error (current/signal level below normal range)	500ms	0s
20850	Engine Exhaust Heat Exchanger Outlet Temperature	16	Warning	Engine Exhaust Heat Exchanger Outlet Temperature sensor error (current / signal level above normal range)	500ms	0s
20850	Engine Exhaust Heat Exchanger Outlet Temperature	7	Soft Shutdown	Engine Exhaust Heat Exchanger Outlet Temperature sensor is missing (not responding properly / no sensor value due to IO-terminal error)	300s	0s
20850	Engine Exhaust Heat Exchanger Outlet Temperature	12	Warning	Engine Exhaust Heat Exchanger Outlet Temperature sensor error (not responding properly / no sensor value due to IO-terminal error)	500ms	0s
20850	Engine Exhaust Heat Exchanger Outlet Temperature	20	Soft Shutdown	Engine Exhaust Heat Exchanger Outlet Temperature exceeds the (load-dependent) permitted upper limit temperature.	2000 ms	0s
21262	Engine Exhaust Heat Exchanger Coolant Level	11	Hard Shutdown	Engine Exhaust Heat Exchanger Coolant Level low coolant level	0s	0s

11.4.2 Status Events

The following table defines the status events associated with this feature:

©2025 Caterpillar. All rights reserved.

Caterpillar: Confidential Green

Table 11.3 Customer Heating Circuit with Exhaust Heat Exchanger Status Events

Name	Description	Ref. SPN	Reference Datapoint	Delay	Pre-Condition Delay
Engine Exhaust Actuator 1 limit position OPEN Activated	Digital Input for the Engine Exhaust Valve Actuator 1 limit stop OPEN. This digital input indicates that the exhaust gas valve is now fully open to allow full exhaust gas flow through the heat exchanger (max. heat utilization, bypass closed).	20852	Engine Exhaust Heat Exchanger Bypass Actuator 1 Position	3s	0s
Engine Exhaust Actuator 1 limit position OPEN Deactivated	Digital Input for the Engine Exhaust Valve Actuator 1 limit stop OPEN. This indicates that the exhaust gas valve is no longer fully open and part of the exhaust gas flow is bypassing the heat exchanger.	20852	Engine Exhaust Heat Exchanger Bypass Actuator 1 Position	3s	0s
Engine Exhaust Actuator 1 limit position CLOSED Activated	Digital Input for the Engine Exhaust Valve Actuator 1 limit stop WARM. This digital input indicates that the exhaust gas valve is now fully closed so that all exhaust gas bypasses the exhaust heat exchanger (bypass valve is fully open).	20852	Engine Exhaust Heat Exchanger Bypass Actuator 1 Position	3s	0s
Engine Exhaust Actuator 1 limit position CLOSED Deactivated	Digital Input for the Engine Exhaust Valve Actuator 1 limit stop WARM. This indicates that the exhaust gas valve is no longer fully closed and the exhaust heat is being used.	20852	Engine Exhaust Heat Exchanger Bypass Actuator 1 Position	3s	0s

11.4.3 Data Feedback

The following table defines the data feedback associated with this feature:

Table 11.4 Customer Heating Circuit with Exhaust Heat Exchanger Data Feedback

SPN	Name	Description	Unit
20850	Engine Exhaust Heat Exchanger Outlet Temperature	Temperature of engine combustion leaving the exhaust bypass system.	°C
20851	Engine Exhaust Heat Exchanger Bypass Actuator 1 Desired Position	Used to transmit the desired position of the exhaust heat exchanger bypass control valve. 0% represents the bypass gas valve is closed and 100% represents the bypass is fully open allowing all the exhaust gas to bypass the exhaust heat exchanger.	%
20852	Engine Exhaust Heat Exchanger Bypass Actuator 1 Position	Position of the exhaust heat exchanger bypass control valve. 0% represents the bypass valve is closed and 100% represents the bypass is fully open allowing all the exhaust gas to bypass the exhaust heat exchanger.	%

©2025 Caterpillar. All rights reserved.

Caterpillar: Confidential Green

11.5 Inputs and Outputs

The following table defines the hardware IO signals required for exhaust heat exchange bypass with customer heating circuit.

Table 11.5 Customer Heating Circuit with Exhaust Heat Exchanger I/O Signals

Descriptive Name	Status	DI	DO	AI (4-20mA)	AO (4-20mA)
Exhaust gas temperature after exhaust heat exchanger	Configurable			X	
Exhaust Valve Actuator 1 Position Open	24V = Opened	X			
Exhaust Valve Actuator 1 Position Closed	24V = Closed	X			
Exhaust Valve Actuator 1 Desired Position	0-100%				X
EHE Coolant Level	Open = Fault	X			

11.6 HMI Display Requirements/Concepts

The controller supports the following visualizations and configurations relating to exhaust heat exchanger bypass with customer site heating circuit.

11.6.1 Customer Site Heating Circuit with EHE Bypass Overview Parameters

The customer site heating with EHE bypass parameters can be seen from the “Cooling Circuits and Heating Circuit” overview screen. This screen should be accessible through the menu location within the HMI navigation similar to section 7.7.1.

Menu → Overviews → Balance of Plant → Cooling Circuits and Heating Circuit.

The following Figure 11.2 shows the engine cooling circuits and heating circuit overview screen and the highlighted section refers to the “Heating Circuit – Exhaust Heat Exchanger Bypass” related parameters. Refer to section 7.7.1 for other details such as navigation etc.

Note: This section only covers the parameters associated with Heating Circuits with EHE bypass as highlighted in the figure 11.2. For the details about parameters associated with other engine colling circuit and heating circuit refer to related sections within this manual.

Note: The show/hide rules for this section of parameters will remain same as mentioned in the section 5.7.1 “SCAC Valve Control Overview Parameters”. Hence it is not explicitly explained in this section.

©2025 Caterpillar. All rights reserved.

Caterpillar: Confidential Green

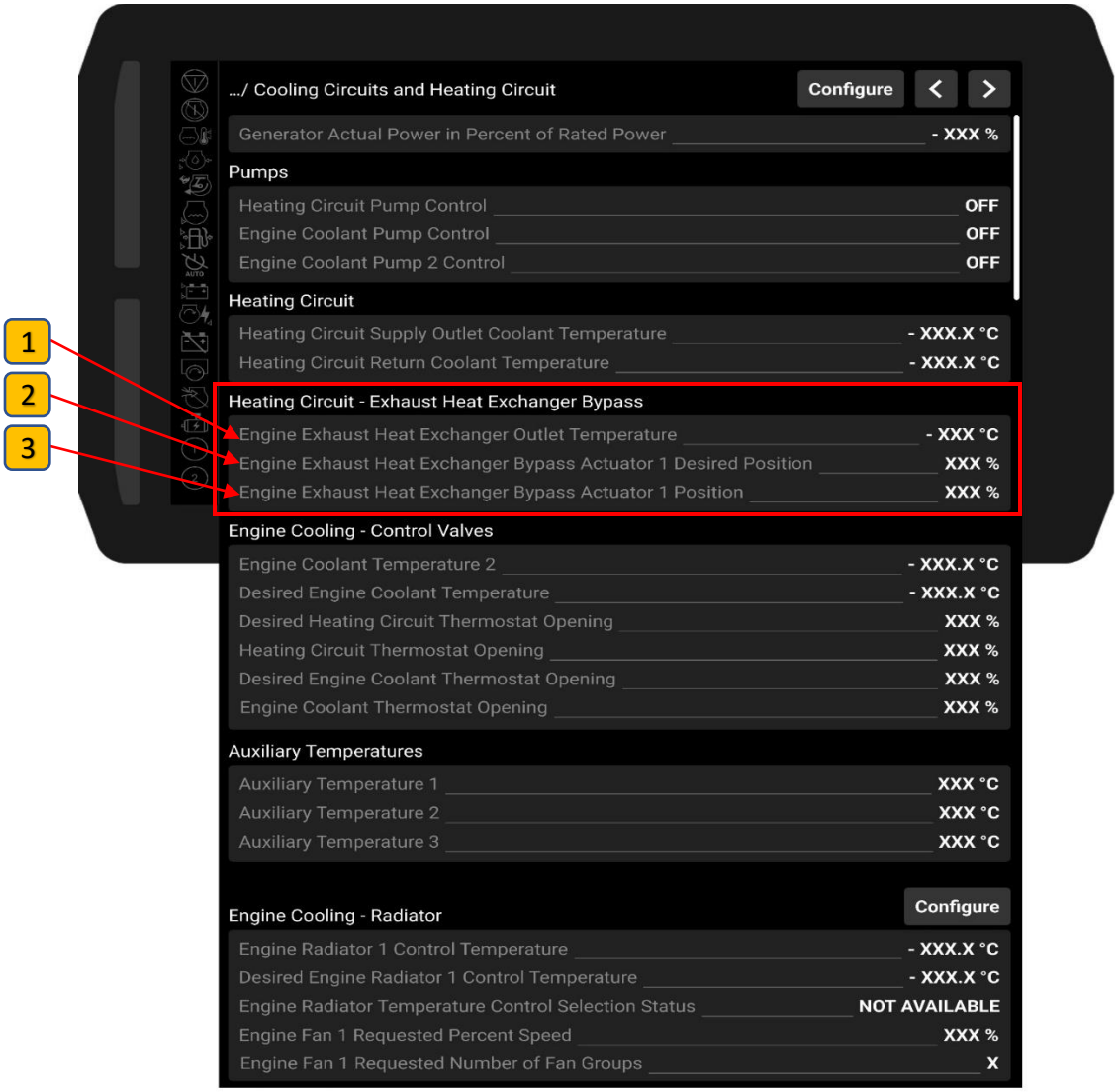

Figure 11.2 Customer Heating Circuit with Exhaust Heat Exchanger Parameters

The following table describes the unit and ranges associated with each parameter.

Table 11.6 Customer Heating Circuit with Exhaust Heat Exchanger Parameters

Ref	Parameter Name	Unit	Valid Data Range
1	Engine Exhaust Heat Exchanger Outlet Temperature	°C	-273 to 1735 °C
2	Engine Exhaust Heat Exchanger Bypass Actuator 1 Desired Position	%	0 to 100%
3	Engine Exhaust Heat Exchanger Bypass Actuator 1 Position	%	0 to 100%

©2025 Caterpillar. All rights reserved.

Caterpillar: Confidential Green

11.6.2 Customer Site Heating Circuit with EHE Bypass Configurable Parameters

The controller supports the following configurable parameters relating to heating circuit with EHE bypass.

The HMI has the ability to configure parameters associated with customer site heating circuit with EHE bypass via the engine cooling circuit and heating circuit configuration screen. All the possible settings related to the heating circuit with EHE are displayed in this configure screen and can be updated.

Initially, the user cannot change the write parameters since it is locked with level-1 (Operator) 'or' level-2 (Technician level) password. Upon entering the level-1 and level-2 passwords by clicking on the "Lock" button available at the right-side bottom corner, the engine cooling circuit and heating circuit screen gets "Unlocked", and now the user allowed to update the values (See Figure 6.6).

To view and update the parameter values, the user can access the configure screen by navigating to:
Menu → Configure → Balance of Plant → Engine Cooling Circuit and Heating Circuit.

The following Figure 11.3 shows the engine cooling circuit and heating circuit configure screen. At the top right-side corner of the screen shortcut button is available to go to cooling circuits and heating circuit overview screen. The user needs to use scroll bar to view and edit the data.

Note: The highlighted parameters in the Figure 11.3 are related to heating circuit with EHE and are described in this section. However, for other parameter details refer to related section of this manual.

For show/hide rules and other details refer to section 5.7.2.

Note: In the Figure 11.3 when the user selects the "Edit" button it will pop-up a standard keypad as shown in Figure 5.8 to enter the desired value.

Note: Parameter "**Exhaust Heat Exchanger Installation Status**" and "**Exhaust Heat Exchanger Bypass Control Type**" are the view only and the user cannot edit the settings of this parameter using HMI screen.

©2025 Caterpillar. All rights reserved.

Caterpillar: Confidential Green

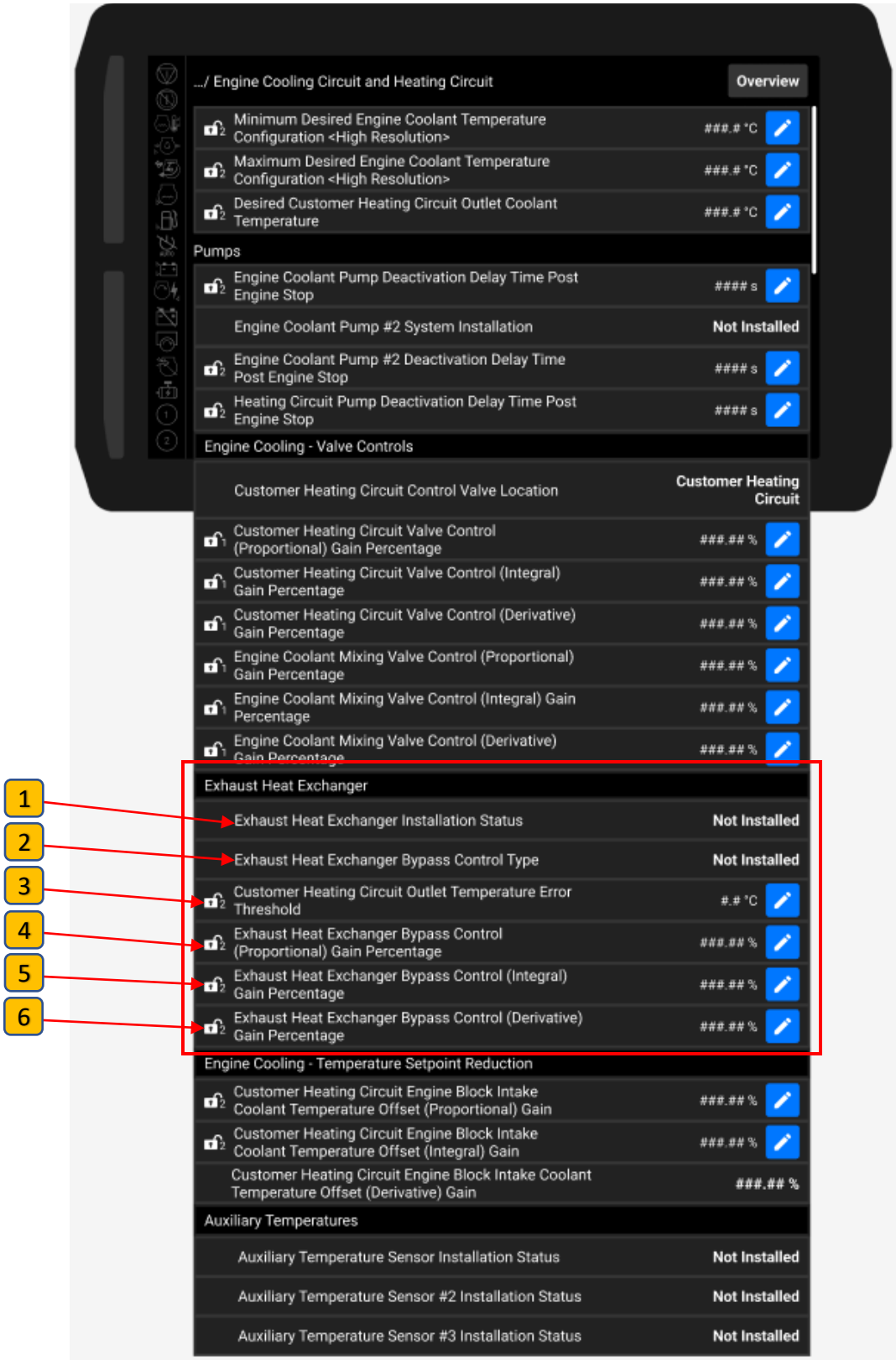

Figure 11.3 Customer Heating Circuit with Exhaust Heat Exchanger Configurable Parameters

©2025 Caterpillar. All rights reserved.

Caterpillar: Confidential Green

The following table describes the unit and ranges associated with each parameter.

Table 11.7 Customer Heating Circuit with Exhaust Heat Exchanger Configurable Parameters

Ref	Parameter Name	Unit	Access Level	Resolution	Range
1	Exhaust Heat Exchanger Installation Status	-	Observer	-	Not Installed Customer Heating Circuit Engine Cooling Circuit
2	Exhaust Heat Exchanger Bypass Control Type	-	Observer	-	Not Installed 4-20 mA PWM
3	Customer Heating Circuit Outlet Temperature Error Threshold	°C	Level 2	0.1	0 to 5 °C
4	Exhaust Heat Exchanger Bypass Control (Proportional) Gain Percentage	%	Level 2	0.01	0 to 100 %
5	Exhaust Heat Exchanger Bypass Control (Integral) Gain Percentage	%	Level 2	0.01	0 to 100 %
6	Exhaust Heat Exchanger Bypass Control (Derivative) Gain Percentage	%	Level 2	0.01	0 to 100 %

©2025 Caterpillar. All rights reserved.

Caterpillar: Confidential Green

12.0 Genset Enclosure Ventilation Control

12.1 Functional Description

The primary aspects of a properly designed engine room ventilation system are cooling air and combustion air. Cooling air refers to the flow of air that removes radiant heat from the engine, generator, other driven equipment and engine room components. Combustion air describes the air that an engine requires to burn fuel.

For systems operating in areas with extremely low ambient temperatures, it must be ensured that the minimum intake air temperatures specified in the genset data sheet are complied with. For this, it is recommended to utilize the radiation heat of the components to heat the engine room. In these cases, the engine room walls must be tight and good thermal insulation should be provided. Warm exhaust air can be fed back through a circulation duct with a circulation louver upstream of the fan.

In this respect, the design of the ventilation system is of particular importance; on the one hand, for the removal of the radiation heat in summer, and on the other hand, for the utilization of the radiation heat for engine room heating in winter.

12.1.1 Genset Enclosure Ventilation Control Without Circulating Air

The supply air flows into the genset room via a weather protection grille, inlet louvers, filter and silencer. The fan pushes the air from the generator side into the genset room. The radiated heat given off by the generator, engine and the auxiliary drives heats the air while passing the genset and flowing through the engine room. The heated air then flows into the environment via the outlet louver, silencer and weather protection grille (Refer to Figure 12.1).

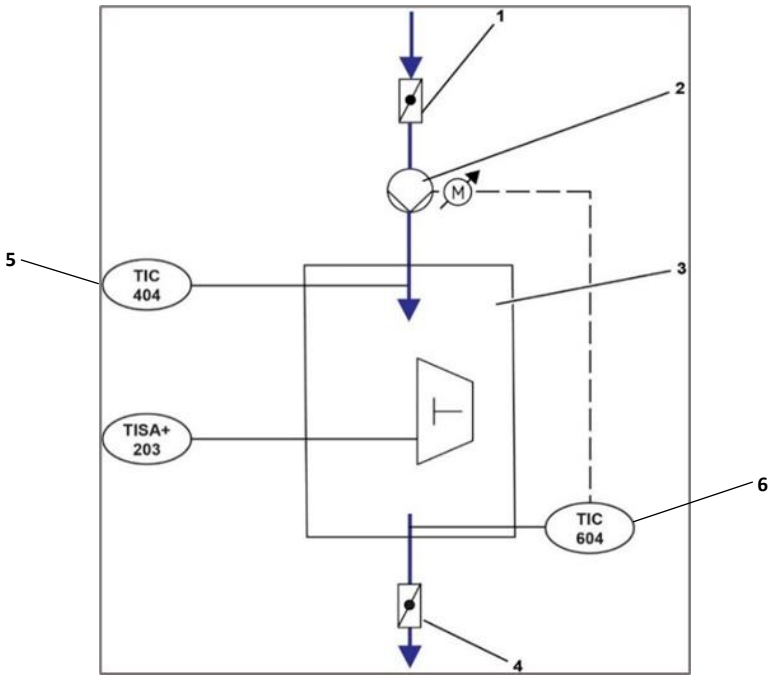

Figure 12.1 Flow diagram: Cabin Ventilation without Recirculation

©2025 Caterpillar. All rights reserved.

Caterpillar: Confidential Green

1. Inlet Flap
2. Ventilator
3. Genset Room
4. Outlet Flap
5. TIC404 – Inlet Temperature
6. TIC604 – Outlet Temperature

12.1.2 Genset Enclosure Ventilation Control With Circulating Air

The supply air flows into the genset room via a weather protection grille, inlet flap, filter and silencer. The fan pushes the air from the generator side into the genset room. The radiated heat given off by the generator, engine and the auxiliary drives heats the air that is blown in. The heated air then flows into the environment via the outlet flap, silencer and weather protection grille. Warm exhaust air can be fed back through a circulation duct with circulation flap upstream of the fan (Refer to Figure 12.2).

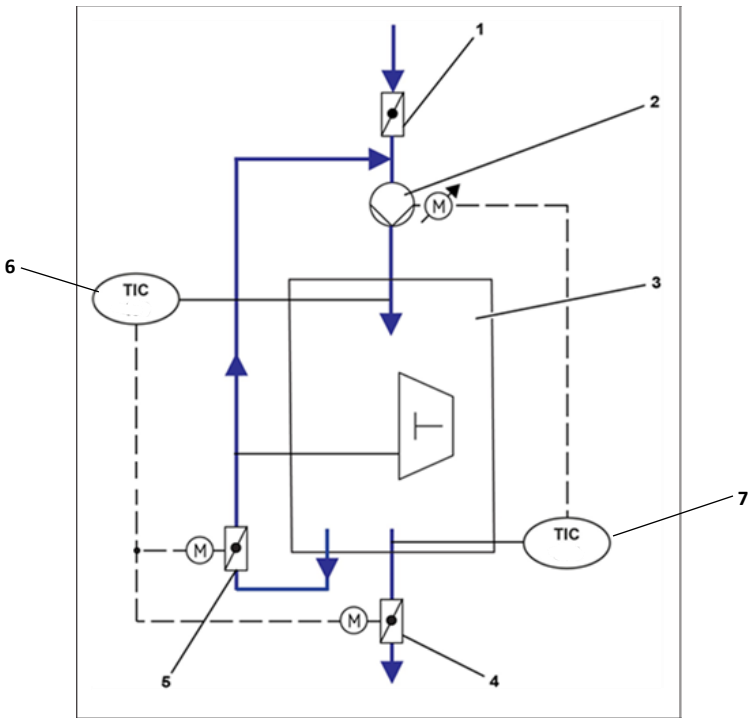

Figure 12.2 Flow diagram: Cabin Ventilation with Recirculation

1. Inlet Louver
2. Fan
3. Genset Room
4. Outlet Louver
5. Recirculation Louver
6. Inlet Temperature Sensor
7. Outlet Temperature Sensor

©2025 Caterpillar. All rights reserved.

Caterpillar: Confidential Green

12.2 Control Sequence

The ventilation shall become active when the BoP demand gets active. The outlet and inlet air temperature control shall use their desired setpoint for engine running. If the engine is stopped and the BoP demand gets inactive, the ventilation shall stay active for the configured running time of the aftercooling period.
The outlet and inlet air temperature control shall use their desired setpoint for engine running during this aftercooling period.

Ventilation Without Recirculation

The configurable exhaust temperature upstream of the air outlet is regulated by the fan speed which is activated by the outlet temperature functions as a control variable. When the temperature increases, the fan speed increases. Minimum fan speeds are available for keeping inflow at minimum in cold ambient temperatures but providing enough air for genset and auxiliary cooling. If standby ventilation control is activated, during genset standby, the control opens the louver and controls fan (at least minimum speed) if either inlet or outlet are above their respective standby setpoints, reversing it if it falls below again (user defined hysteresis).

Ventilation With Recirculation

The genset enclosure ventilation control with circulating air uses the same control algorithms as the control without recirculating air. The only difference in the control of inlet air temperature control with recirculation compared to the version without recirculation is the mapping of the raise and lower pulses from the controller to the outputs and the deactivation condition for ventilation demand with standby ventilation.

The louver positions of the circulation and outlet louvers regulate the configurable inlet air temperature to the genset room. When the temperature is too low, the circulation louver moves in the OPEN direction until it fully opens, then the outlet louver moves in the CLOSED direction. This means that the cold outside air is mixed with warm exhaust air using the circulation duct and the temperature at the air inlet is maintained.

Genset Not In Operation, Available:

- Inlet louver: closed
- Fan: OFF
- Circulation louver: any position (Optional)
- Outlet louver: closed

Genset started:

- Inlet louver control: ON
- Fan: Minimum speed
- Inlet air temperature: control via circulation louver and outlet louver
- Circulation louver: any position (Optional)
- Outlet louver: any position
- Exhaust air temperature: control via fan speed

Genset shut off

- Fan: continues to run according to the parameterized follow-up time
- Controls: remain active
- After the follow-up time has expired: fan shuts off, inlet and outlet louvers close

©2025 Caterpillar. All rights reserved.

Caterpillar: Confidential Green

12.2.1 Ventilation Fan Control

12.2.1.1 Temperature Setpoint Switch

The temperature setpoint (Actual T_{set}) for the desired outlet temperature of the enclosure depends on the actual operating state. The setpoint for genset running is used from start preparations until the expiry of the aftercooling time. The setpoint for genset not running is used in all other operating states.

12.2.1.2 PID Controller

The PID controller is used to accurately adjust and control the responsiveness of the fan to correct the outlet temperature to match the desired setpoint. The PID controller has three configurable setpoints for proportional gain, integral gain and derivative gain.

The output of the "Max Block" shall be a value that can be used to drive a configurable 4-20 mA output (0%-100%) to adjust fan speed. (Default: 4mA = 0%, 20mA = 100%).

12.2.1.3 Minimum Fan Speed Calculation

The minimum fan speed depends on the current power of the engine, expressed as a percentage of the rated power. The setpoint is constantly updated based on linear inter and extrapolation between the two minimum fan speed setpoints at 40% of the rated engine power and at 100% of the rated engine power. The graph below provides an example of the curve.

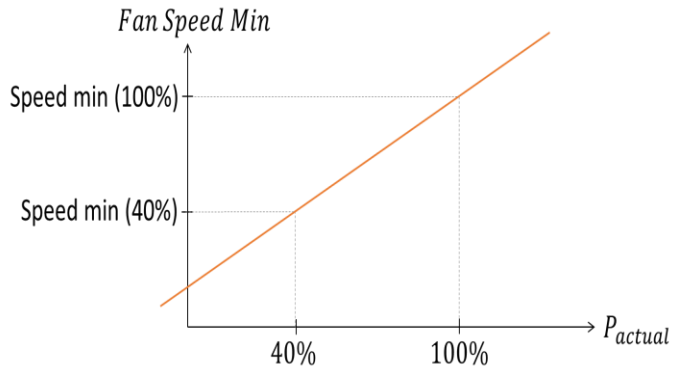

Figure 12.3 Minimum Fan Speed Calculation Curve – Genset Enclosure Ventilation Control

When the calculated value becomes negative, it shall be set to 0.00%. If the calculated value exceeds 100% it needs to be set to 100% (max possible value for the fan speed). These are programmable inputs.

12.2.2 Inlet Louver Control

12.2.2.1 Using Digital Pulses

The position of this inlet louver is controlled by two digital outputs on the BoP I/O controller, which are used to open or close the louver. When both outputs are "off" the louver keeps its position. The activation of both outputs at the same time is to be avoided.

On ventilation demand, the output for opening the louver shall become active and it will remain in active state until the input for inlet louver stop position open gets active. The inlet louver is closed when the ventilation gets inactive.

©2025 Caterpillar. All rights reserved.

Caterpillar: Confidential Green

When the ventilation demand is gone, the output for closing the louver shall become active and it will remain in active state until the input for inlet louver stop position close gets active.

12.2.2.2 End Position Sensors

Since control logic needs to know when the louver is at one of its two stop positions, end position sensors must be available and connected to two digital inputs on the BoP I/O controller. Movements into the direction of the end position should be suppressed.

The current position is expressed from the status of the digital inputs by three states: closed (0%); in between (50%); and open (100%).

12.2.2.3 Enclosure Inlet Air Temperature Control (Outlet Louver)

The temperature of the genset enclosure inlet temperature is regulated to the active setpoint for current operating state. The controller adjusts the outlet louver according to the deviation between the actual temperature and the setpoint as follows:

- If, setpoint < actual temperature: Open the Louver (more air flow)
- If, setpoint > actual temperature: Close the louver (less air flow)
- If, setpoint = actual temperature: Nothing to do, keep the current position.

12.2.2.4 Temperature Setpoint Switch

The temperature setpoint for the desired inlet temperature of the enclosure depends on the actual operating state. The setpoint for genset running is used from start preparations till the end of ventilation follow up time. The setpoint for genset not running is used in all other operating states.

12.2.3 Outlet Louver Control

12.2.3.1 Using Digital Pulses

The position of the louver is controlled by two digital outputs on the BoP I/O controller used to move the louver either into the close direction or towards open. When both outputs are “off” the louver keeps its position.

Based on the controller output, the time for which outlet louver should be open/close is defined directly by the pulse length individually for both sides using the PWM pulses. The controller will not send signals for both directions at the same time.

12.2.3.2 End Position Sensors

Since control logic needs to know when the louver is at one of its two stop positions, end position sensors must be available and connected to two digital inputs on the BoP I/O controller. Movements into the direction of the end position should be suppressed.

The current position is expressed from the status of the digital inputs by three states: closed (0%); in between (50%); and open (100%).

12.2.4 Standby Ventilation

The control of fan, inlet louver and outlet louver are enabled and disabled at the same time, when ventilation is demanded. The ventilation is demanded for operation with the setpoints for genset running.

©2025 Caterpillar. All rights reserved.

Caterpillar: Confidential Green

If the option is enabled, the ventilation can also be demanded during genset standby with the setpoints for genset not running.

When Disabled
If the standby ventilation is disabled, the controls shall be disabled at the end of the post-cooling time. The setpoint for status “genset running” remains the active setpoint.

When Enabled
If the standby ventilation is enabled, the controls shall stay active at the end of post cooling delay time. The outlet and inlet air temperature control shall use their desired setpoint for engine not running. The control shall stay active until **all** the following conditions are fulfilled:

- Enclosure inlet temperature is below the active setpoint minus a configured hysteresis value.
- Enclosure outlet temperature is below the active setpoint minus a configured hysteresis value.
- The controller output of the outlet control PID is 0%
- The outlet louver is in stop position close (Feedback DI active).

If the disabled conditions are fulfilled the controls shall be disabled and the inlet louver shall be closed. The control shall stay inactive until one of the following conditions is fulfilled:

- Enclosure inlet temperature is above the active setpoint plus a configured hysteresis value.
- Enclosure outlet temperature is above the active setpoint plus a configured hysteresis value.

If the enable conditions are fulfilled the controls shall be enabled and the inlet louver shall be opened. The setpoint for status “genset not running” shall get active.

12.3 Control Setpoints
This subsection contains the complete collection of function-related parameters required to set-up and tune the control.

Table 12.1 Genset Enclosure Ventilation Control Setpoints

Parameter	Resolution	Unit	Range/Status
Genset Enclosure Ventilation Control Configuration	-	-	Disabled With Recirculation Without Recirculation
Genset Enclosure Ventilation Engine Running Desired Outlet Temperature Setpoint	0.1	°C	[-30, 60]
Genset Enclosure Ventilation Fan Speed (Proportional) Gain Percentage	0.01	%	[0,100]
Genset Enclosure Ventilation Fan Speed (Integral) Gain Percentage	0.01	%	[0,100]
Genset Enclosure Ventilation Fan Speed (Derivative) Gain Percentage	0.01	%	[0,100]

©2025 Caterpillar. All rights reserved.

Caterpillar: Confidential Green

Parameter	Resolution	Unit	Range/Status
Genset Enclosure Ventilation Low Load Minimum Fan Speed	0.01	%	[0,100]
Genset Enclosure Ventilation Full Load Minimum Fan Speed	0.01	%	[0,100]
Genset Enclosure Ventilation Engine Running Desired Enclosure Intake Air Temperature Setpoint	0.1	°C	[-30, 60]
Genset Enclosure Ventilation Louver Control (Proportional) Gain Percentage	0.01	%	[0,100]
Genset Enclosure Ventilation Louver Control (Integral) Gain Percentage	0.01	%	[0,100]
Genset Enclosure Ventilation Louver Control (Derivative) Gain Percentage	0.01	%	[0,100]
Genset Enclosure Ventilation Engine Not Running Maximum Run Time	1	minute	[0, 60]
Genset Enclosure Ventilation Engine Not Running Control Enable Status	-	-	Enabled Disabled
High Genset Enclosure Intake Air Temperature Threshold	0.1	°C	[-30, 60]
High Genset Enclosure Intake Air Temperature Event Response Configuration	-	-	Warning Soft Shutdown
Genset Enclosure Intake Air Temperature Minimum Input Value	0.1	°C	[-30,60]
Genset Enclosure Intake Air Temperature Maximum Input Value	0.1	°C	[-30,60]
Genset Enclosure Outlet Air Temperature Minimum Input Value	0.1	°C	[-30,60]
Genset Enclosure Outlet Air Temperature Maximum Input Value	0.1	°C	[-30,60]

Genset Enclosure Ventilation Control Configuration
Used to read and program the type of genset enclosure ventilation control that is used.

Genset Enclosure Ventilation Engine Running Desired Outlet Temperature Setpoint
Used to read and program the desired outlet temperature for the genset enclosure while the engine is running.

Genset Enclosure Ventilation Fan Speed (Proportional) Gain Percentage
Used to read and program the proportional gain for a PID controller used to control the genset enclosure ventilation fan speed as an absolute percentage of factory set proportional gain. Effective Gain = (Gain) Percentage / 100 x Factory Setting (Gain).

Genset Enclosure Ventilation Fan Speed (Integral) Gain Percentage
Used to read and program the Integral gain for a PID controller used to control the genset enclosure ventilation fan speed as an absolute percentage of factory set integral gain. Effective Gain = (Gain) Percentage /100 x Factory Setting (Gain).

Genset Enclosure Ventilation Fan Speed (Derivative) Gain Percentage
Used to read and program the derivative gain for a PID controller used to control the genset enclosure ventilation fan speed as an absolute percentage of factory set derivative gain. Effective Gain = (Gain) Percentage / 100 x Factory Setting (Gain).

©2025 Caterpillar. All rights reserved.

Caterpillar: Confidential Green

Genset Enclosure Ventilation Low Load Minimum Fan Speed
Used to read and program Minimum Genset Enclosure ventilation fan speed at low load.

Genset Enclosure Ventilation Full Load Minimum Fan Speed
Used to read and program the minimum desired genset enclosure ventilation fan speed at full load.

Genset Enclosure Ventilation Engine Running Desired Enclosure Intake Air Temperature Setpoint
Used to read and program the desired intake air temperature for the genset enclosure while the engine is running.

Genset Enclosure Ventilation Louver Control (Proportional) Gain Percentage
Used to read and program the proportional gain for a PID controller used to control the Genset Enclosure Ventilation Louver positions as an absolute percentage of factory set proportional gain. Effective Gain = (Gain) Percentage / 100 x Factory Setting (Gain). This is used to control the louver positions between Open and Closed

Genset Enclosure Ventilation Louver Control (Integral) Gain Percentage
Used to read and program the Integral gain for a PID controller used to control the Genset Enclosure Ventilation Louver positions as an absolute percentage of factory set integral gain. Effective Gain = (Gain) Percentage / 100 x Factory Setting (Gain). This is used to control the louver positions between Open and Closed.

Genset Enclosure Ventilation Louver Control (Derivative) Gain Percentage
Used to read and program the derivative gain for a PID controller used to control the genset enclosure ventilation louver positions as an absolute percentage of factory set derivative gain. Effective Gain = (Gain) Percentage / 100 x Factory Setting (Gain). This is used to control the louver positions between Open and Closed.

Genset Enclosure Ventilation Engine Not Running Maximum Run Time
Used to read and program the maximum amount of time the Genset Enclosure Ventilation runs when the engine is stopped.

Genset Enclosure Ventilation Engine Not Running Control Enable Status
Used to read and program the enabled genset enclosure ventilation control when the engine is not running. When this setpoint is set to “Enabled” it will allow the user to configure additional setpoints mentioned in the Table 12.2 followed by individual parameter description.

High Genset Enclosure Intake Air Temperature Threshold
Used to read and program the threshold used for the detection of the high genset enclosure intake air temperature event.

High Genset Enclosure Intake Air Temperature Event Response Configuration
Used to read and program the desired system response to a high Genset Enclosure Intake Air Temperature event.

©2025 Caterpillar. All rights reserved.

Caterpillar: Confidential Green

Genset Enclosure Intake Air Temperature Minimum Input Value
Used to read and program the Genset Enclosure Intake Air Temperature that corresponds to the minimum input value. For example, for a current loop sensor, the minimum input value is the value to be used when the sensor is outputting 4mA.

Genset Enclosure Intake Air Temperature Maximum Input Value
Used to read and program the Genset Enclosure Intake Air Temperature that corresponds to the maximum input value. For example, for a current loop sensor, the maximum input value is the value to be used when the sensor is outputting 20mA.

Genset Enclosure Outlet Air Temperature Minimum Input Value
Used to read and program the Genset Enclosure Outlet Air Temperature that corresponds to the minimum input value. For example, for a current loop sensor, the minimum input value is the value to be used when the sensor is outputting 4mA.

Genset Enclosure Outlet Air Temperature Maximum Input Value
Used to read and program the Genset Enclosure Outlet Air Temperature that corresponds to the maximum input value. For example, for a current loop sensor, the maximum input value is the value to be used when the sensor is outputting 20mA.

Table 12.2 Genset Enclosure Ventilation Control Setpoints – When "Genset Enclosure Ventilation Engine Not Running Control Enable Status" is "Enabled"

Parameter	Resolution	Unit	Range/Status
Genset Enclosure Ventilation Engine Not Running Desired Outlet Temperature Setpoint	0.1	°C	[-30, 60]
Genset Enclosure Ventilation Engine Not Running Desired Enclosure Intake Air Temperature Setpoint	0.1	°C	[-30, 60]
Genset Enclosure Ventilation Engine Not Running Control Temperature Hysteresis	0.1	°C	[0,30]

Genset Enclosure Ventilation Engine Not Running Desired Outlet Temperature Setpoint
Used to read and program the desired outlet temperature for the genset enclosure while the engine is not running.

Genset Enclosure Ventilation Engine Not Running Desired Enclosure Intake Air Temperature Setpoint
Used to read and program the desired intake air temperature for the genset enclosure while the engine is not running.

Genset Enclosure Ventilation Engine Not Running Control Temperature Hysteresis
Used to read and program the temperature difference hysteresis between actual and desired Genset Enclosure Ventilation outlet temperatures while engine is not running. When the actual outlet temperature exceeds the desired temperature the ventilation control will be activated and when the actual outlet temperature is less than the desired temperature minus this hysteresis value the ventilation control will be deactivated.

©2025 Caterpillar. All rights reserved.

Caterpillar: Confidential Green

12.4Diagnostics and Feedback

12.4.1 Diagnostics

The following table defines the diagnostics events associated with this feature:

Table 12.3 Genset Enclosure Ventilation Control Diagnostics Events

SPN	Name	FMI	ERC	Description	Delay	Pre-Condition Delay
20831	Genset Enclosure Intake Air Temperature	1	Soft Shutdown	Genset Enclosure Intake Air Temperature sensor error (current/signal level below normal range)	300s	0s
20831	Genset Enclosure Intake Air Temperature	0	Soft Shutdown	Genset Enclosure Intake Air Temperature sensor error (current / signal level above normal range)	300s	0s
20831	Genset Enclosure Intake Air Temperature	18	Warning	Genset Enclosure Intake Air Temperature sensor error (current/signal level below normal range)	500 ms	0s
20831	Genset Enclosure Intake Air Temperature	16	Warning	Genset Enclosure Intake Air Temperature sensor error (current / signal level above normal range)	500 ms	0s
20831	Genset Enclosure Intake Air Temperature	7	Soft Shutdown	Genset Enclosure Intake Air Temperature sensor is missing (not responding properly / no sensor value due to IO-terminal error)	300s	0s
20831	Genset Enclosure Intake Air Temperature	12	Warning	Genset Enclosure Intake Air Temperature sensor error (not responding properly / no sensor value due to IO-terminal error)	500 ms	0s
20831	Genset Enclosure Intake Air Temperature	31	Air Temp Sensor Diagnostic Response Config	Genset Enclosure Intake Air Temperature is too high	2s	0s
20831	Genset Enclosure Intake Air Temperature	20	Warning	Genset Enclosure Intake Air Temperature is too high	2s	0s
20832	Genset Enclosure Outlet Air Temperature	1	Soft Shutdown	Genset Enclosure Outlet Air Temperature sensor error (current/signal level below normal range)	300s	0s
20832	Genset Enclosure Outlet Air Temperature	0	Soft Shutdown	Genset Enclosure Outlet Air Temperature sensor error (current / signal level above normal range)	300s	0s
20832	Genset Enclosure Outlet Air Temperature	18	Warning	Genset Enclosure Outlet Air Temperature sensor error (current/signal level below normal range)	500 ms	0s
20832	Genset Enclosure Outlet Air Temperature	16	Warning	Genset Enclosure Outlet Air Temperature sensor error (current / signal level above normal range)	500 ms	0s

©2025 Caterpillar. All rights reserved.

Caterpillar: Confidential Green

SPN	Name	FMI	ERC	Description	Delay	Pre-Condition Delay
20832	Genset Enclosure Outlet Air Temperature	7	Soft Shutdown	Genset Enclosure Outlet Air Temperature sensor is missing (not responding properly / no sensor value due to IO-terminal error)	300 s	0s
20832	Genset Enclosure Outlet Air Temperature	12	Warning	Genset Enclosure Outlet Air Temperature sensor error (not responding properly / no sensor value due to IO-terminal error)	500 ms	0s
21156	Genset Enclosure Fan Status	0	Soft Shutdown	Genset Enclosure Fan indicates a fault.	300s	0s
21156	Genset Enclosure Fan Status	12	Warning	Genset Enclosure Fan indicates a fault.	0s	0s
20854	Genset Enclosure Ventilation Louver Actuator 1 Position	7	Soft Shutdown	Genset Enclosure Ventilation Louver Actuator 1 Position could not be opened completely.	0s	300s

12.4.2 Status Events

The following table defines the status events associated with this feature:

Table 12.4 Genset Enclosure Ventilation Control Status Events

Name	Description	Ref. SPN	Reference Datapoint	Delay	Pre-Condition Delay
Genset Enclosure Ventilation Louver Actuator 1 Position limit position switch OPEN Activated	Digital Input for the Genset Enclosure Ventilation Louver Actuator 1 Position limit stop OPEN. This digital input identifies that the louver is now fully open to provide the maximum air flow.	20854	Genset Enclosure Ventilation Louver Actuator 1 Position	3s	0s
Genset Enclosure Ventilation Louver Actuator 1 Position limit position switch OPEN Deactivated	Digital Input for the Genset Enclosure Ventilation Louver Actuator 1 Position limit stop OPEN. This indicates that the louver is no longer fully open.	20854	Genset Enclosure Ventilation Louver Actuator 1 Position	3s	0s
Genset Enclosure Ventilation Louver Actuator 1 Position limit position switch CLOSED Activated	Digital Input for the Genset Enclosure Ventilation Louver Actuator 1 Position limit stop CLOSED. This digital input identifies that the louver is now fully closed (minimum air flow).	20854	Genset Enclosure Ventilation Louver Actuator 1 Position	3s	0s
Genset Enclosure Ventilation Louver Actuator 1 Position limit position switch CLOSED Deactivated	Digital Input for the Genset Enclosure Ventilation Louver Actuator 1 Position limit stop CLOSED. This indicates that the louver is no longer fully closed .	20854	Genset Enclosure Ventilation Louver Actuator 1 Position	3s	0s
Genset Enclosure Ventilation Louver Actuator 2 Position limit position switch OPEN Activated	Digital Input for the Genset Enclosure Ventilation Louver Actuator 1 Position limit stop OPEN. This digital input identifies that the louver is now fully open to provide the maximum air flow.	20856	Genset Enclosure Ventilation Louver Actuator 1 Position	3s	0s

©2025 Caterpillar. All rights reserved.

Caterpillar: Confidential Green

Name	Description	Ref. SPN	Reference Datapoint	Delay	Pre-Condition Delay
Genset Enclosure Ventilation Louver Actuator 2 Position limit position switch OPEN Deactivated	Digital Input for the Genset Enclosure Ventilation Louver Actuator 1 Position limit stop OPEN. This indicates that the louver is no longer fully open.	20856	Genset Enclosure Ventilation Louver Actuator 2 Position	3s	0s
Genset Enclosure Ventilation Louver Actuator 2 Position limit position switch CLOSED Activated	Digital Input for the Genset Enclosure Ventilation Louver Actuator 1 Position limit stop CLOSED. This digital input identifies that the louver is now fully closed (minimum air flow).	20856	Genset Enclosure Ventilation Louver Actuator 2 Position	3s	0s
Genset Enclosure Ventilation Louver Actuator 2 Position limit position switch CLOSED Deactivated	Digital Input for the Genset Enclosure Ventilation Louver Actuator 1 Position limit stop CLOSED. This indicates that the louver is no longer fully closed .	20856	Genset Enclosure Ventilation Louver Actuator 2 Position	3s	0s
Genset Enclosure Fan enable command activated	Indicates that the Genset Enclosure Fan enable signal has been activated.	-	Room Ventilation Release signal	0s	0s
Genset Enclosure Fan enable command deactivated	Indicates that the Genset Enclosure Fan enable signal has been deactivated.	-	Room Ventilation Release signal	0s	0s
Genset Enclosure Ventilation Recirculation Louver Position limit position switch OPEN Activated	Digital Input for the Genset Enclosure Ventilation Recirculation Louver Actuator Position limit stop OPEN. This digital input identifies that the louver is now fully open to provide the maximum air flow.	20858	Genset Enclosure Ventilation Recirculation Louver Actuator Position	3s	0s
Genset Enclosure Ventilation Recirculation Louver Actuator Position limit position switch OPEN Deactivated	Digital Input for the Genset Enclosure Ventilation Recirculation Louver Actuator Position limit stop OPEN. This indicates that the louver is no longer fully open.	20858	Genset Enclosure Ventilation Recirculation Louver Actuator Position	3s	0s
Genset Enclosure Ventilation Recirculation Louver Actuator Position limit position switch CLOSED Activated	Digital Input for the Genset Enclosure Ventilation Recirculation Louver Actuator Position limit stop CLOSED. This digital input identifies that the louver is now fully closed (minimum air flow).	20858	Genset Enclosure Ventilation Recirculation Louver Actuator Position	3s	0s
Genset Enclosure Ventilation Recirculation Louver Actuator Position limit position switch CLOSED Deactivated	Digital Input for Genset Enclosure Ventilation Recirculation Louver Actuator Position limit stop CLOSED. This indicates that the louver is no longer fully closed .	20858	Genset Enclosure Ventilation Recirculation Louver Actuator Position	3s	0s

©2025 Caterpillar. All rights reserved.

Caterpillar: Confidential Green

12.4.3 Data Feedback

The following table defines the data feedback associated with this feature:

Table 12.5 Genset Enclosure Ventilation Control Data Feedback

SPN	Name	Description	Unit
20831	Genset Enclosure Intake Air Temperature	Temperature of air at the inlet of the genset enclosure.	°C
20854	Genset Enclosure Ventilation Louver Actuator 1 Position	Position of the ventilation louver 1. A value of 0% represents fully closed and 100% represents fully open. 50 % indicates a position “in between”.	%
20856	Genset Enclosure Ventilation Louver Actuator 2 Position	Position of the ventilation louver 2. A value of 0% represents fully closed and 100% represents fully open. 50 % indicates a position “in between”.	%
20853	Genset Enclosure Ventilation Louver Actuator 1 Desired Position	Actuator that controls the opening of the ventilation louver 1. The control command to the actuator, normalized to percent, where 0% nominally represents fully closed (minimum air flow) and 100% represents fully open (maximum air flow).	%
20855	Genset Enclosure Ventilation Louver Actuator 2 Desired Position	Actuator that controls the opening of the ventilation louver 2. The control command to the actuator, normalized to percent, where 0% nominally represents fully closed (minimum air flow) and 100% represents fully open (maximum air flow).	%
20832	Genset Enclosure Outlet Air Temperature	Temperature of air at the outlet of the genset enclosure.	°C
20833	Genset Enclosure Fan Requested Percent Speed	Fan speed in the system as a ratio of the actual fan drive (current speed) to the fully engaged fan drive (maximum fan speed). A two-state fan (off/on) will use 0% and 100% respectively. A three-state fan (off/intermediate/on) will use 0%, 50% and 100% respectively.	%
20858	Genset Enclosure Ventilation Recirculation Louver Actuator Position	Position of the recirculation ventilation louver. A value of 0% represents fully closed and 100% represents fully open.	%
20857	Genset Enclosure Ventilation Recirculation Louver Actuator Desired Position	Actuator that controls the opening of the recirculation ventilation louver. The control command to the actuator, normalized to percent, where 0% nominally represents fully closed (minimum air flow) and 100% represents fully open (maximum air flow).	%

12.5 Inputs and Outputs

The following table defines the hardware IO signals required for genset enclosure ventilation control.

Table 12.6 Genset Enclosure Ventilation Control IO Signals

Descriptive Name	Status	DI	DO	AI (4-20mA)	AO (4-20mA)
Engine Room Intake 1 Air Temperature	Configurable			X	
Engine Room Outlet 1 Air Temperature	Configurable			X	
Ventilation Louver Actuator 1 Position Closed	0V = Closed	X			
Ventilation Louver Actuator 1 Position Open	0V = Opened	X			
Ventilation Louver Actuator 2 Position Closed	0V = Closed	X			

©2025 Caterpillar. All rights reserved.

Caterpillar: Confidential Green

Descriptive Name	Status	DI	DO	AI (4-20mA)	AO (4-20mA)
Ventilation Louver Actuator 2 Position Open	0V = Opened	X			
Ventilation Louver Actuator 1 direction Open	24V = Open		X		
Ventilation Louver Actuator 1 direction Close	24V = Close		X		
Ventilation Louver Actuator 2 direction Open	24V = Open		X		
Ventilation Louver Actuator 2 direction Close	24V = Close		X		
Engine Room Fan 1 Requested Percent Speed	0-100%				X
Room Ventilation (VCR) Start signal	24V = On		X		
Room Ventilation Fault	24V = Fault	X			

12.6 HMI Display Requirements/Concepts

The controller supports the following visualizations and configurations relating to genset enclosure ventilation.

12.6.1 Genset Enclosure Ventilation Overview Screen

The genset enclosure ventilation control parameters can be seen from the “Genset Enclosure Ventilation” overview screen. This screen should be accessible through the menu location within the HMI navigation (Refer to Figure 12.4):
Menu → Overviews → Balance of Plant → Genset Enclosure Ventilation.

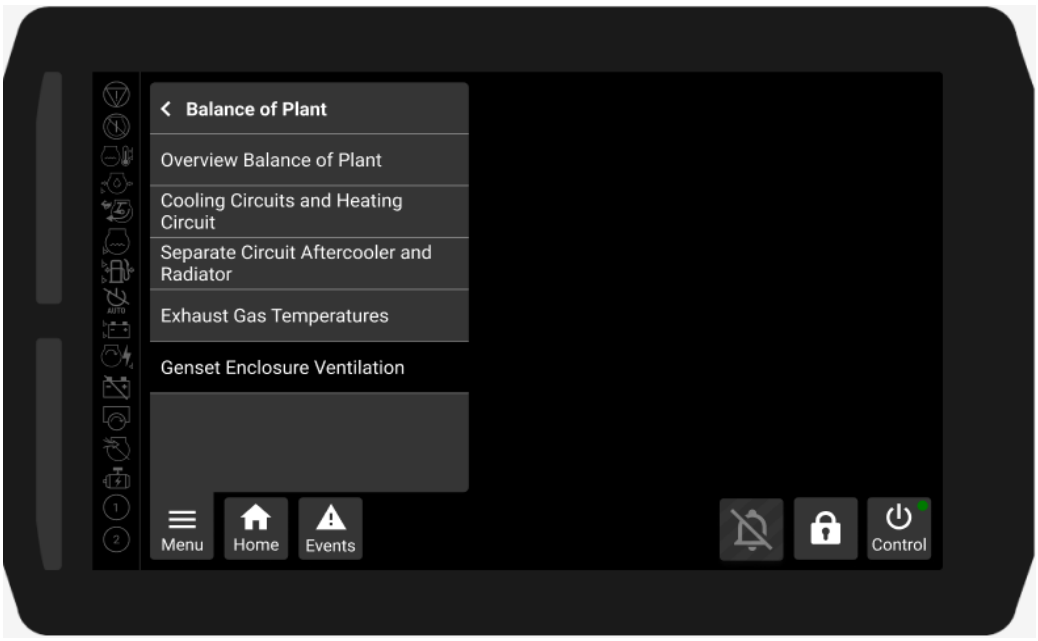

Figure 12.4 Balance of Plant Submenu (Genset Enclosure Ventilation)

Figure 12.5 shows the “Genset Enclosure Ventilation” overview screen. At the genset enclosure ventilation overview screen, the parameters are being displayed along with their respective values and units. At the top right-side corner, a shortcut to move between other "Balance of Plant" overview menu, is available. This allows users to scroll through all screens from this menu without opening the Balance of Plant submenu. If the last screen from the submenu is reached and the user clicks on the right button, the user will return to the first screen from the submenu.

©2025 Caterpillar. All rights reserved.

Caterpillar: Confidential Green

Also, the shortcut to move from “Genset Enclosure Ventilation” overview screen to “Genset Enclosure Ventilation” configure screen is available at the top right-side corner of the screen (see reference [10]).

Note: The show/hide rules for this screen will remain same as mentioned in the section 5.7.1 “SCAC Valve Control Overview Parameters”. Hence it is not explicitly explained in this section.

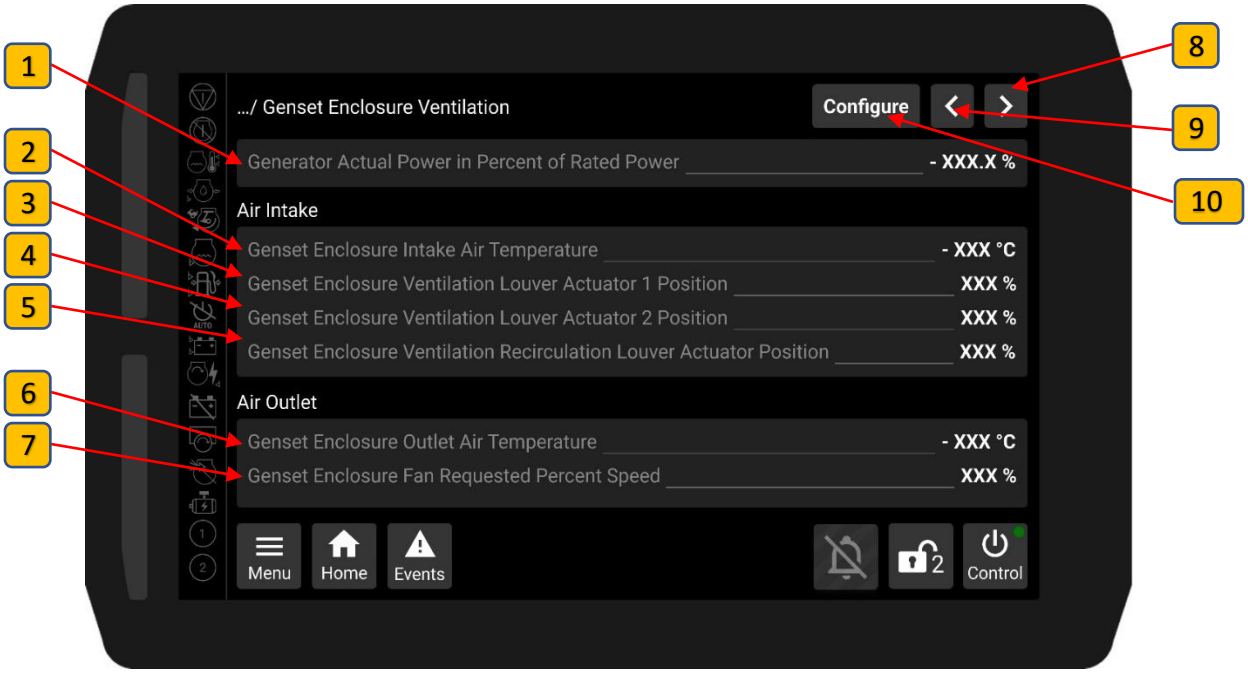

Figure 12.5 Genset Enclosure Ventilation Overview Screen

The following table describes the unit and ranges associated with each parameter.

Table 12.7 Genset Enclosure Ventilation Overview Screen Parameters

Ref	Parameter Name	Unit	Valid Data Range
1	Generator Actual Power in Percent of Rated Power	%	-251 to 250.99%
2	Genset Enclosure Intake Air Temperature	°C	-40 to 210 °C
3	Genset Enclosure Ventilation Louver Actuator 1 Position	%	0 to 100%
4	Genset Enclosure Ventilation Louver Actuator 2 Position	%	0 to 100%
5	Genset Enclosure Ventilation Recirculation Louver Actuator Position	%	0 to 100%
6	Genset Enclosure Outlet Temperature	°C	-40 to 210 °C
7	Genset Enclosure Fan Requested Percent Speed	%	0 to 100%
8	Shortcut to Overview Balance of Plant Screen	-	-
9	Shortcut to Overview Exhaust Gas Temperatures Screen	-	-
10	Shortcut Button to the BoP Configure Screen: “Genset Enclosure Ventilation”	-	-

©2025 Caterpillar. All rights reserved.

Caterpillar: Confidential Green

12.6.2 Genset Enclosure Ventilation User Configurable Parameters

The HMI has the ability to configure parameters associated with genset enclosure ventilation via the configuration screen. All the possible settings related to genset enclosure ventilation are being displayed in this configure screen and can be updated.

Initially, the user cannot change the write parameters since it is locked with level-1 (Operator) 'or' level-2 (Technician level) password. Upon entering the level-1 and level-2 passwords by clicking on the "Lock" button available at the right-side bottom corner, the genset enclosure ventilation configure screen gets "Unlocked", and now the user allowed to update the values (See Figure 12.6). To view and update the parameter values, the user can access the configure screen by navigating to:
Menu → Configure → Balance of Plant →Genset Enclosure Ventilation.

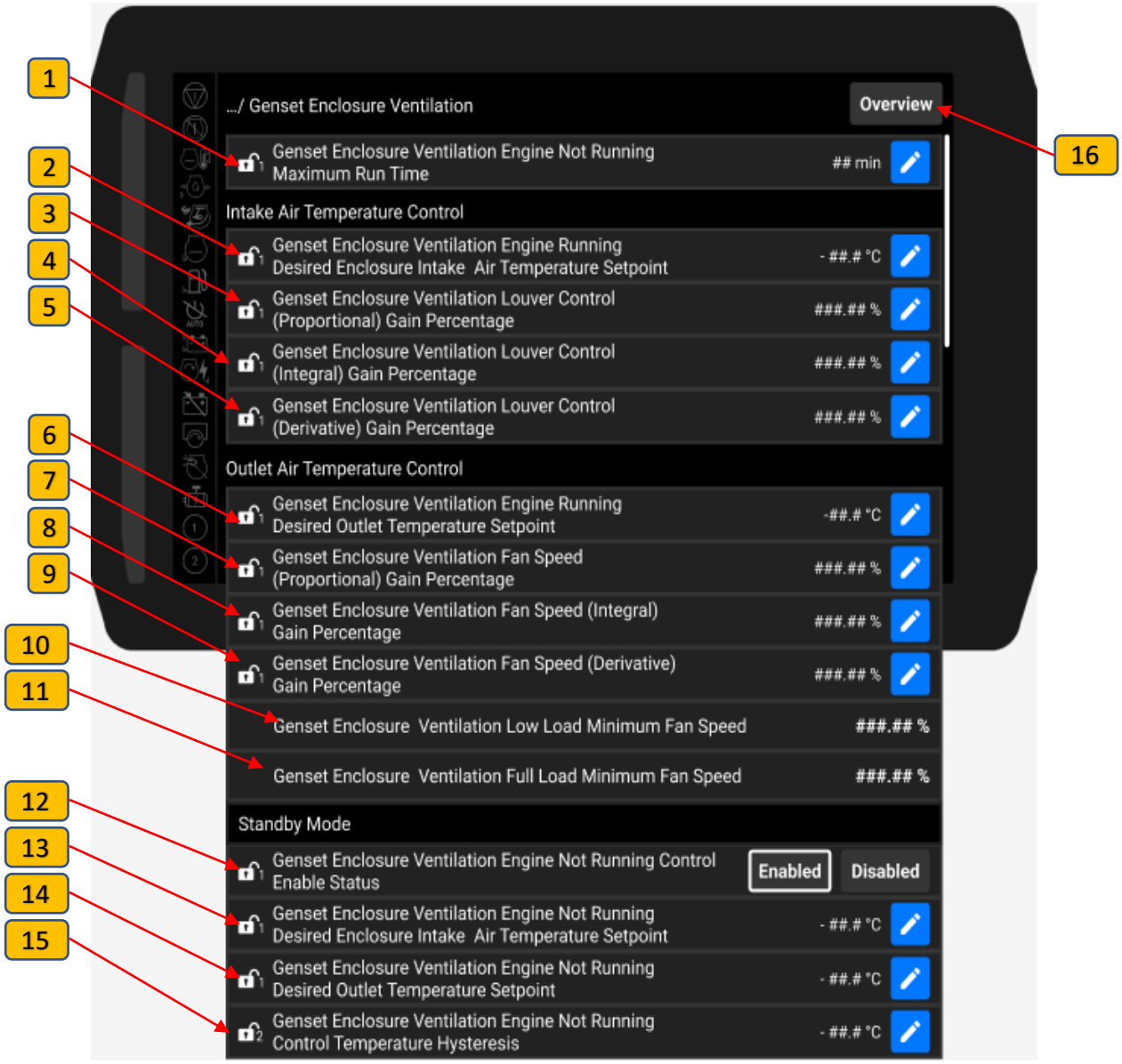

Figure 12.6 Genset Enclosure Ventilation Configure Screen

©2025 Caterpillar. All rights reserved.

Caterpillar: Confidential Green

The above Figure 12.6 shows the genset enclosure ventilation configure screen. At the top right-side corner of the screen shortcut button is available to go to genset enclosure ventilation overview screen. The user needs to use scroll bar to view and edit the data.

The following table describes the unit and ranges associated with each parameter.

Table 12.8 Genset Enclosure Ventilation Overview Screen Parameters

Ref	Parameter Name	Unit	Access Level	Resolution	Range
1	Genset Enclosure Ventilation Engine Not Running Maximum Run Time	min	Level 1	1	0 to 60 minute
2	Genset Enclosure Ventilation Engine Running Desired Enclosure Intake Air Temperature Setpoint	°C	Level 1	0.1	-30 to 60 °C
3	Genset Enclosure Ventilation Louver Control (Proportional) Gain Percentage	%	Level 1	0.01	0 to 100 %
4	Genset Enclosure Ventilation Louver Control (Integral) Gain Percentage	%	Level 1	0.01	0 to 100 %
5	Genset Enclosure Ventilation Louver Control (Derivative) Gain Percentage	%	Level 1	0.01	0 to 100 %
6	Genset Enclosure Ventilation Engine Running Desired Outlet Temperature Setpoint	°C	Level 1	0.1	-30 to 60 °C
7	Genset Enclosure Ventilation Fan Speed (Proportional) Gain Percentage	%	Level 1	0.01	0 to 100 %
8	Genset Enclosure Ventilation Fan Speed (Integral) Gain Percentage	%	Level 1	0.01	0 to 100 %
9	Genset Enclosure Ventilation Fan Speed (Derivative) Gain Percentage	%	Level 1	0.01	0 to 100 %
10	Genset Enclosure Ventilation Low Load Minimum Fan Speed	%	Observer	0.01	0 to 100 %
11	Genset Enclosure Ventilation Full Load Minimum Fan Speed	%	Observer	0.01	0 to 100 %
12	Genset Enclosure Ventilation Engine Not Running Control Enable Status	-	Level 1	-	Enabled Disabled
13	Genset Enclosure Ventilation Engine Not Running Desired Enclosure Intake Air Temperature Setpoint	°C	Level 1	0.1	-30 to 60 °C
14	Genset Enclosure Ventilation Engine Not Running Desired Outlet Temperature Setpoint	°C	Level 1	0.1	-30 to 60 °C
15	Genset Enclosure Ventilation Engine Not Running Control Temperature Hysteresis	°C	Level 2	0.1	0 to 30 °C
16	Shortcut to “Genset Enclosure Ventilation” Overview Screen	-	-	-	-

©2025 Caterpillar. All rights reserved.

Caterpillar: Confidential Green

Note: In the Figure 12.6 when the user selects the “Edit” button it will pop-up a standard keypad as shown in Figure 5.8 to enter the desired value.

Note: Parameter “**Genset Enclosure Ventilation Low Load Minimum Fan Speed**” and “**Genset Enclosure Ventilation Full Load Minimum Fan Speed**” are the view only and the user cannot edit the settings of these parameters using HMI screen.

©2025 Caterpillar. All rights reserved.

Caterpillar: Confidential Green

13.0 Smoke/Fire Alarm and Ventilation Override

The plant may have a fire alarm system (e.g. smoke detectors). The fire alarm system typically consists of several detectors, sensors, optical signals and acoustic signals. If one of the detectors triggers, the control system can initiate the corresponding protective measures.

Optical and acoustic signals trigger independently of this BoP control. The same applies for additional safety shut off valves.

13.1 Functional Description

13.1.1 Fire Alarm

On indication of a fire the aim of the ventilation reaction is to prevent the expansion of the fire. Due to the configuration status the ventilation reaction can be disabled. The fire alarm is indicated via digital input on the control system I/O.

The actuators controlled in case of an alarm are part of the ventilation control system, which consists of two or three louvers controlled by discrete outputs for open and close direction and feedback via end position sensors.

<u>Fire Alarm Ventilation Reaction Control Sequence</u>

1. Forced ventilation switch off
   - Inlet louvers: close completely
     - Close command active until stop position close reached
   - Outlet louvers: close completely
     - Close command active until stop position close reached
   - Circulation louver (if present): close completely
     - Close command active until stop position close reached
   - Ventilation fan: disable and speed to 0%
     - Disable VFD Start Signal
     - 0% on the speed request output

2. Reset the ventilation reaction
   - The control and ventilation shall stay in its state until the alarm condition is gone, and the alarm is acknowledged. Ventilation shall then switch back to temperature control.

13.1.2 Full Ventilation Reaction Add-On For Gas Alarm

In some applications there is sometimes a need for the ventilation control system to be engaged and set to maximum ventilation. One example of this might be a gas alarm system is triggered by a low-level amount of gas and the application call for the system to turn the ventilation on high to remove the excess gas. For this reason, there is a digital input on the BoP I/O controller that can be used to trigger full ventilation.

<u>Full Ventilation Reaction Control Sequence</u>

1. Forced ventilation switches on
   - Inlet louvers: open completely
     - Open command active until stop position open reached

©2025 Caterpillar. All rights reserved.

Caterpillar: Confidential Green

- Outlet louvers: open completely
  - Open command active until stop position open reached
- Circulation louver (if present): close completely
  - Close command active until stop position close reached
  - Ventilation Fan: Start Signal Enabled and Speed = 100%

2. Reset the ventilation reaction
   - The control and ventilation shall stay in its state until the trigger condition is gone, and its related alarm is acknowledged. Ventilation should then switch back to temperature control.

13.1.3 Prioritization Between Fire Alarm And Gas Alarm

If a fire alarm is signaled via digital input or the full ventilation response add-on for gas alarm is requested via the digital input on the BoP I/O controller the force of the specified ventilation state will have the higher priority than any other control linked to the affected control outputs.

In case of occurrence at the same time, the reaction on the fire alarm will have the highest priority.

13.2 Control Setpoints

This subsection contains the complete collection of function-related parameters required to set-up and tune the control.

Table 13.1 Smoke Alarm and Ventilation Override Control Setpoints

Parameter	Resolution	Unit	Range / Status
Genset Enclosure Fire Detection Installation Status	-	-	Installed Not Installed
Genset Enclosure Fire Detection Event Response Configuration	-	-	Soft Shutdown Hard Shutdown
Genset Enclosure Purge Installation Status	-	-	Installed Not Installed
Genset Enclosure Purge Event Response Configuration	-	-	Warning Soft Shutdown Hard Shutdown

Genset Enclosure Fire Detection Installation Status
Used to read and program the genset enclosure fire detection installation status.

Genset Enclosure Fire Detection Event Response Configuration
Used to read and program the response for a fire detection event.

Genset Enclosure Purge Installation Status
Used to read and program the installation status of the feature that allows purging of the genset enclosure.

Genset Enclosure Purge Event Response Configuration
Used to read and program the desired response to a genset enclosure purge Event.

13.3 Diagnostics and Feedback

©2025 Caterpillar. All rights reserved.

Caterpillar: Confidential Green

13.3.1 Diagnostics

The following table defines the diagnostics events associated with this feature:

Table 13.2 Smoke Alarm and Ventilation Override Diagnostics Events

SPN	Name	FMI	ERC	Description	Delay	Pre-Condition Delay
21159	Smoke Detected Inside Genset Enclosure	0	-	A sensor has detected the presence of smoke inside the genset enclosure.	0s	0s
2650	Fan Override Indicator	0	-	The digital input for the full ventilation override is triggered.	0s	0s

13.3.2 Status Events

The status events for the louvers should be applicable as described in chapters 12 “Genset Enclosure Ventilation Control” and apply equally (stop positions open/close for inlet, outlet and recirculation louver). Hence it is not explicitly explained in this section.

13.3.3 Data Feedback

Data feedback related to this feature are explained in chapter 12 “Genset Enclosure Ventilation Control” Refer to states and availability of ventilation actuators.

13.4 Inputs and Outputs

The following table defines the hardware IO signals required for smoke/fire alarm.

Table 13.3 Smoke Alarm and Ventilation Override IO Signals

Descriptive name	Status	DI	DO	AI (4-20mA)	AO (4-20mA)
Smoke Detections	Open = Fault	X			
Genset Enclosure Full Ventilation Override	Open = On	X			

©2025 Caterpillar. All rights reserved.

Caterpillar: Confidential Green

14.0 Exhaust Gas and Auxiliary Temperature Sensors CHP

To help with different monitoring needs due to CHP applications there are four additional temperature monitoring analog inputs (4-20mA) required. One is for exhaust heat exchanger outlet temperature and the other three are needed for user configurable datapoints for the coolant circuits.

14.1 Exhaust Gas – Additional IO

By observing the exhaust gas temperature and the exhaust gas back pressure, conclusions can be drawn about certain operating conditions in the plant. Exceeding the permissible exhaust back pressure has a significant effect on the performance, fuel consumption and thermal load of the engine. Exhaust gas temperatures should remain below the ignition limits of the gas-air mixture, or at a level that reduces the aging of catalysts.

14.1.1 Control Sequence

The additional sensors in the exhaust path do not perform any control tasks, but provide important additional information, up to and including stopping the machine to prevent damage. As temperature sensors these are the first exhaust gas temperatures after the engine and the sensor after the catalyst.

The availability of the temperature sensors (Engine exhaust temperature) and (Exhaust gas temperature after catalytic converter) are tied to their user configurable individual activation parameters. The activation parameter is used to disable the corresponding value and diagnostic events. If activated the following diagnostic events will be available:

- Sensor fault monitoring for all analog inputs.
- Monitoring of the upper temperature limit, upper limit as configurable, load dependent trip point.

14.1.2 Trip Setpoint Calculation for Exhaust Gas Temperatures

Diagnostic monitoring of the individual exhaust gas temperatures is configurable. For each temperature sensor, there are two configurable setpoints that define the respective tolerable upper temperature limit of the exhaust gas at 40% and 100% of the rated engine power. The actual trigger threshold for the diagnostic event is linearly interpolated between these two grid points based on the current power (in percentage of the nominal power) as shown below:

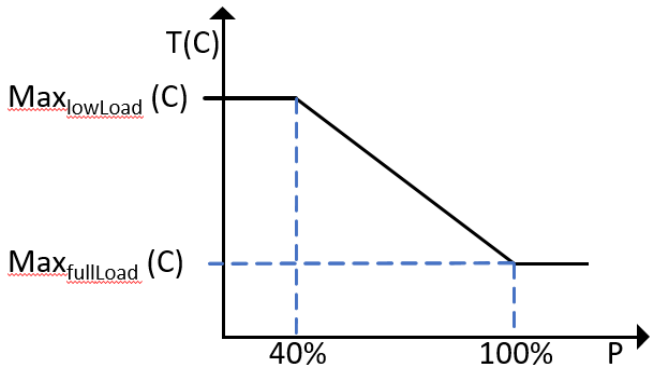

Figure 14.1 Trip Setpoint Calculation Curve for Exhaust Gas Temperatures

©2025 Caterpillar. All rights reserved.

Caterpillar: Confidential Green

14.2 Auxiliary Temperature Sensors

To match the different monitoring needs due to CHP explained in chapter 7.0 “Engine Cooling Circuit (3-Way Valve & Pumps)”, chapter 10.0 “Customer Site Heating Circuit: (3-Way Valve & Pump Control)”, and chapter 11.0 “Exhaust Heat Exchanger with Customer Site Heating Circuit”, three additional, user configurable datapoints for the coolant circuits are needed:

1. Auxiliary Temperature Sensor 1
2. Auxiliary Temperature Sensor 2
3. Auxiliary Temperature Sensor 3

Availability of the temperature sensors is tied to their individual activation parameters and is used to disable the corresponding value and diagnostic events. The 4mA to 20 mA analog input signals for the temperature sensors are configurable (4mA the currents minimum, 20mA the currents maximum input value).

14.3 Control Setpoints

This subsection contains the complete collection of function-related parameters required to set-up and tune the control.

Table 14.1 Exhaust Gas and Auxiliary Temperature Sensors CHP Control Setpoints

Parameter	Resolution	Unit	Range / Status
Auxiliary Temperature Sensor Installation Status	-	-	Installed Not Installed
Auxiliary Temperature Sensor #2 Installation Status	-	-	Installed Not Installed
Auxiliary Temperature Sensor #3 Installation Status	-	-	Installed Not Installed
Auxiliary Temperature #1 Minimum Input Value	0.1	°C	[0,200]
Auxiliary Temperature #1 Maximum Input Value	0.1	°C	[0,200]
Auxiliary Temperature #2 Minimum Input Value	0.1	°C	[0,200]
Auxiliary Temperature #2 Maximum Input Value	0.1	°C	[0,200]
Auxiliary Temperature #3 Minimum Input Value	0.1	°C	[0,200]
Auxiliary Temperature #3 Maximum Input Value	0.1	°C	[0,200]
Aftertreatment #1 Gas Oxidation Catalyst Outlet Temperature Sensor Installation Status	-	-	Installed Not Installed
Engine Low Load Aftertreatment #1 Gas Oxidation Catalyst Outlet Temperature Threshold	1	°C	[0,800]
Engine Full Load Aftertreatment #1 Gas Oxidation Catalyst Outlet Temperature Threshold	1	°C	[0,800]
Aftertreatment #1 Gas Oxidation Catalyst Outlet Temperature Minimum Input Value	0.1	°C	[0,1000]
Aftertreatment #1 Gas Oxidation Catalyst Outlet Temperature Maximum Input Value	0.1	°C	[0,1000]

©2025 Caterpillar. All rights reserved.

Caterpillar: Confidential Green

Auxiliary Temperature Sensor Installation Status
Used to read and program the installation status of the auxiliary temperature sensor.

Auxiliary Temperature Sensor #2 Installation Status
Used to read and program the installation status of the auxiliary temperature sensor #2.

Auxiliary Temperature Sensor #3 Installation Status
Used to read and program the installation status of the auxiliary temperature sensor #3.

Auxiliary Temperature #1 Minimum Input Value
Used to read and program the Auxiliary Temperature #1 that corresponds to the minimum input value. For example, for a current loop sensor, the minimum input value is the value to be used when the sensor is outputting 4mA.

Auxiliary Temperature #1 Maximum Input Value
Used to read and program the Auxiliary Temperature #1 that corresponds to the maximum input value. For example, for a current loop sensor, the maximum input value is the value to be used when the sensor is outputting 20mA.

Auxiliary Temperature #2 Minimum Input Value
Used to read and program the Auxiliary Temperature #2 that corresponds to the minimum input value. For example, for a current loop sensor, the minimum input value is the value to be used when the sensor is outputting 4mA.

Auxiliary Temperature #2 Maximum Input Value
Used to read and program the Auxiliary Temperature #2 that corresponds to the maximum input value. For example, for a current loop sensor, the maximum input value is the value to be used when the sensor is outputting 20mA.

Auxiliary Temperature #3 Minimum Input Value
Used to read and program the Auxiliary Temperature #3 that corresponds to the minimum input value. For example, for a current loop sensor, the minimum input value is the value to be used when the sensor is outputting 4mA.

Auxiliary Temperature #3 Maximum Input Value
Used to read and program the Auxiliary Temperature #3 that corresponds to the maximum input value. For example, for a current loop sensor, the maximum input value is the value to be used when the sensor is outputting 20mA.

Aftertreatment #1 Gas Oxidation Catalyst Outlet Temperature Sensor Installation Status
Used to read and program the installation status of the exhaust temperature sensor located after the oxidation catalyst.

Engine Low Load Aftertreatment #1 Gas Oxidation Catalyst Outlet Temperature Threshold
Used to read and program the aftertreatment #1 gas oxidation catalyst outlet temperature threshold at low engine load.

©2025 Caterpillar. All rights reserved.

Caterpillar: Confidential Green

Engine Full Load Aftertreatment #1 Gas Oxidation Catalyst Outlet Temperature Threshold
Used to read and program the aftertreatment #1 gas oxidation catalyst outlet temperature threshold at full engine load.

Aftertreatment #1 Gas Oxidation Catalyst Outlet Temperature Minimum Input Value
Used to read and program the Aftertreatment #1 Gas Oxidation Catalyst Outlet Temperature that corresponds to the minimum input value. For example, for a current loop sensor, the minimum input value is the value to be used when the sensor is outputting 4mA.

Aftertreatment #1 Gas Oxidation Catalyst Outlet Temperature Maximum Input Value
Used to read and program the Aftertreatment #1 Gas Oxidation Catalyst Outlet Temperature that corresponds to the maximum input value. For example, for a current loop sensor, the maximum input value is the value to be used when the sensor is outputting 20mA.

14.4 Diagnostic and Feedback

14.4.1 Diagnostics
The following tables defines the diagnostic events associated with this feature:

Table 14.2 Exhaust Gas Diagnostics Events

SPN	Name	FMI	ERC	Description	Delay	Pre-Condition Delay
173	Engine Exhaust Temperature	1	Soft Shutdown	Engine Exhaust Temperature sensor error (current/signal level below normal range)	300s	0s
173	Engine Exhaust Temperature	0	Soft Shutdown	Engine Exhaust Temperature sensor error (current / signal level above normal range)	300s	0s
173	Engine Exhaust Temperature	18	Warning	Engine Exhaust Temperature sensor error (current/signal level below normal range)	500 ms	0s
173	Engine Exhaust Temperature	16	Warning	Engine Exhaust Temperature sensor error (current / signal level above normal range)	500 ms	0s
173	Engine Exhaust Temperature	7	Soft Shutdown	Engine Exhaust Temperature sensor is missing (not responding properly / no sensor value due to IO-terminal error)	300s	0s
173	Engine Exhaust Temperature	12	Warning	Engine Exhaust Temperature sensor error (not responding properly / no sensor value due to IO-terminal error)	500 ms	0s
173	Engine Exhaust Temperature	20	Soft-Shutdown	Engine Exhaust temperature exceeds the load dependent trip point (calculated).	2000 ms	0s
4754	Aftertreatment 1 Gas Oxidation Catalyst Outlet Temperature	1	Soft Shutdown	Exhaust gas temperature after Gas Oxidation Catalyst sensor error (current/signal level below normal range)	300s	0s
4754	Aftertreatment 1 Gas Oxidation Catalyst Outlet Temperature	0	Soft Shutdown	Exhaust gas temperature after Gas Oxidation Catalyst sensor error (current / signal level above normal range)	300s	0s
4754	Aftertreatment 1 Gas Oxidation Catalyst Outlet Temperature	18	Warning	Exhaust gas temperature after Gas Oxidation Catalyst sensor error (current/signal level below normal range)	500 ms	0s

©2025 Caterpillar. All rights reserved.

Caterpillar: Confidential Green

SPN	Name	FMI	ERC	Description	Delay	Pre-Condition Delay
4754	Aftertreatment 1 Gas Oxidation Catalyst Outlet Temperature	16	Warning	Exhaust gas temperature after Gas Oxidation Catalyst sensor error (current / signal level above normal range)	500 ms	0s
4754	Aftertreatment 1 Gas Oxidation Catalyst Outlet Temperature	7	Soft Shutdown	Exhaust gas temperature after Gas Oxidation Catalyst sensor is missing (not responding properly / no sensor value due to IO-terminal error)	300s	0s
4754	Aftertreatment 1 Gas Oxidation Catalyst Outlet Temperature	12	Warning	Exhaust gas temperature after Gas Oxidation Catalyst sensor error (not responding properly / no sensor value due to IO-terminal error)	500 ms	0s
4754	Aftertreatment 1 Gas Oxidation Catalyst Outlet Temperature	20	Soft-Shutdown	Exhaust gas temperature after Gas Oxidation Catalyst exceeds the load dependent trip point (calculated).	2000 ms	0s

Table 14.3 Auxiliary Temperature Sensors CHP Diagnostics Events

SPN	Name	FMI	ERC	Description	Delay	Pre-Condition Delay
441	Auxiliary Temperature 1	18	Warning	Auxiliary Coolant Temperature sensor 1 error (current/signal level below normal range)	500 ms	0s
441	Auxiliary Temperature 1	16	Warning	Auxiliary Coolant Temperature sensor 1 error (current / signal level above normal range)	500 ms	0s
441	Auxiliary Temperature 1	12	Warning	Auxiliary Coolant Temperature sensor 1 error (not responding properly / no sensor value due to IO-terminal error)	500 ms	0s
442	Auxiliary Temperature 2	18	Warning	Auxiliary Coolant Temperature sensor 2 error (current/signal level below normal range)	500 ms	0s
442	Auxiliary Temperature 2	16	Warning	Auxiliary Coolant Temperature sensor 2 error (current / signal level above normal range)	500 ms	0s
442	Auxiliary Temperature 2	12	Warning	Auxiliary Coolant Temperature sensor 2 error (not responding properly / no sensor value due to IO-terminal error)	500 ms	0s
21161	Auxiliary Temperature 3	18	Warning	Auxiliary Coolant Temperature sensor 3 error (current/signal level below normal range)	500 ms	0s
21161	Auxiliary Temperature 3	16	Warning	Auxiliary Coolant Temperature sensor 3 error (current / signal level above normal range)	500 ms	0s
21161	Auxiliary Temperature 3	12	Warning	Auxiliary Coolant Temperature sensor 3 error (not responding properly / no sensor value due to IO-terminal error)	500 ms	0s

14.4.2 Data Feedback

The following table defines the data feedback associated with this feature:

©2025 Caterpillar. All rights reserved.

Caterpillar: Confidential Green

Table 14.4 Exhaust Gas and Auxiliary Temperature Sensors CHP Data Feedback

SPN	Name	Description	Unit
4754	Aftertreatment 1 Gas Oxidation Catalyst Outlet Temperature	Temperature of engine combustion byproducts leaving the gas oxidation catalyst in exhaust bank 1. This parameter should be used with engines fuelled by gaseous fuel like natural gas or propane. A separate parameter has been defined for diesel fuelled engines	°C
441	Auxiliary Temperature 1	Temperature measured by auxiliary temperature sensor #1. Not to be used in place of existing SPs.	°C
442	Auxiliary Temperature 2	Temperature measured by auxiliary temperature sensor #2. Not to be used in place of existing SPs.	°C
21161	Auxiliary Temperature 3	Temperature measured by auxiliary temperature sensor #3. Not to be used in place of existing SPs.	°C

14.5 Inputs and Outputs

The following table defines the hardware IO signals required for exhaust gas and auxiliary temperature sensor CHP.

Table 14.5 Exhaust Gas and Auxiliary Temperature Sensors CHP IO Signals

Descriptive name	Status	DI	DO	AI (4-20mA)	AO (4-20mA)
Auxiliary #1 Temperature Sensor	Configurable			X	
Auxiliary #2 Temperature Sensor	Configurable			X	
Auxiliary #3 Temperature Sensor	Configurable			X	
Exhaust gas temperature after catalytic converter	Configurable			X	

14.6 HMI Display Requirements/Concepts

The controller supports the following visualizations and configurations relating to genset enclosure ventilation.

14.6.1 Exhaust Gas Temperature Overview Parameters

The exhaust gas temperature parameters can be seen from the “Exhaust Gas Temperature” overview screen. This screen should be accessible through the menu location within the HMI navigation (Refer to Figure 14.2): Menu → Overviews → Balance of Plant → Exhaust Gas Temperature.

Figure 14.3 shows the “Exhaust Gas Temperature” overview screen. At the exhaust gas temperature overview screen, the parameters are being displayed along with their respective values and units. At the top right-side corner, a shortcut to move between other "Balance of Plant" overview menu, is available. This allows users to scroll through all screens from this menu without opening the Balance of Plant submenu. If the last screen from the submenu is reached and the user clicks on the right button, the user will return to the first screen from the submenu.

Note: The show/hide rules for this screen will remain same as mentioned in the section 5.7.1 “SCAC Valve Control Overview Parameters”. Hence it is not explicitly explained in this section.

©2025 Caterpillar. All rights reserved.

Caterpillar: Confidential Green

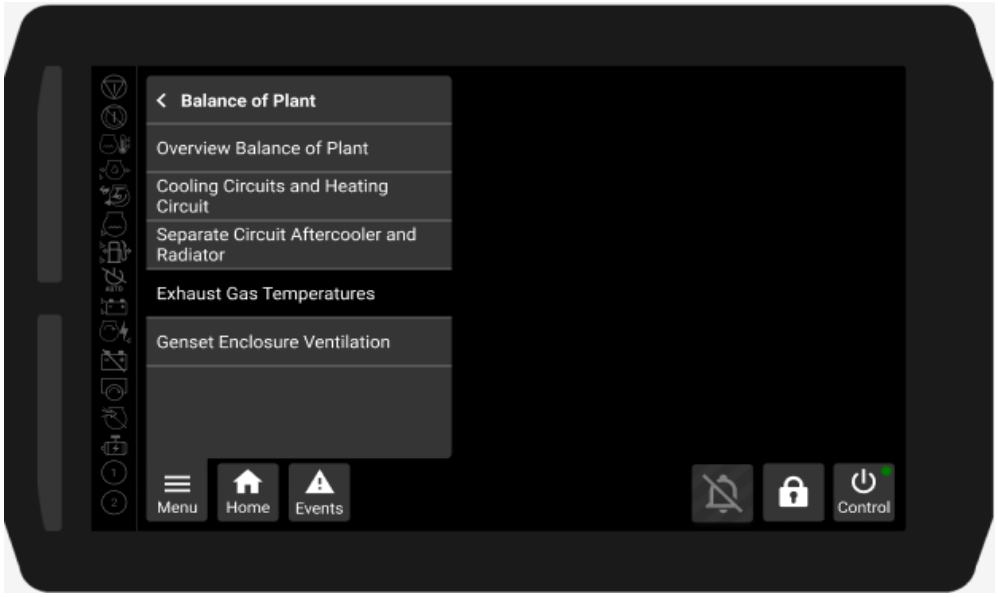

Figure 14.2 Balance of Plant Submenu (Exhaust Gas Temperature)

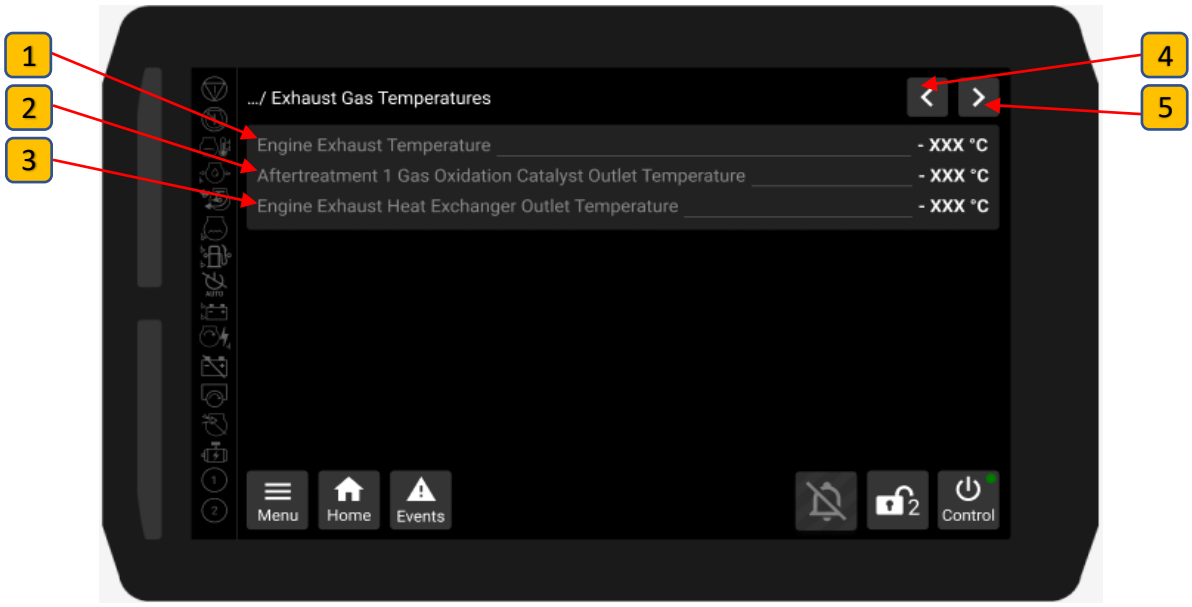

Figure 14.3 Exhaust Gas Temperatures Overview screen

The following table describes the unit and ranges associated with each parameter.

Table 14.6 Exhaust Gas Temperature Overview Parameters

Ref	Parameter Name	Unit	Valid Data Range
1	Engine Exhaust Temperature	°C	-273 to 1735 °C
2	Aftertreatment 1 Gas Oxidation Catalyst Outlet Temperature	°C	-273 to 1735 °C
3	Engine Exhaust Heat Exchanger Outlet Temperature	°C	-273 to 1735 °C
4	Shortcut to Overview Separate Circuit Aftercooler and Radiator Screen	-	-
5	Shortcut to Overview Genset Enclosure Ventilation Screen	-	-

©2025 Caterpillar. All rights reserved.

Caterpillar: Confidential Green

14.6.2 Auxiliary Temperature Overview Parameters

The auxiliary temperature related parameters can be seen from the “Cooling Circuits and Heating Circuit” overview screen. This screen should be accessible through the menu location within the HMI navigation similar to section 7.7.1.

Menu → Overviews → Balance of Plant → Cooling Circuits and Heating Circuit.

The following Figure 14.4 shows the engine cooling circuits and heating circuit overview screen and the highlighted section refers to the “Auxiliary Temperature” related parameters. Refer to section 7.7.1 for other details such as navigation etc.

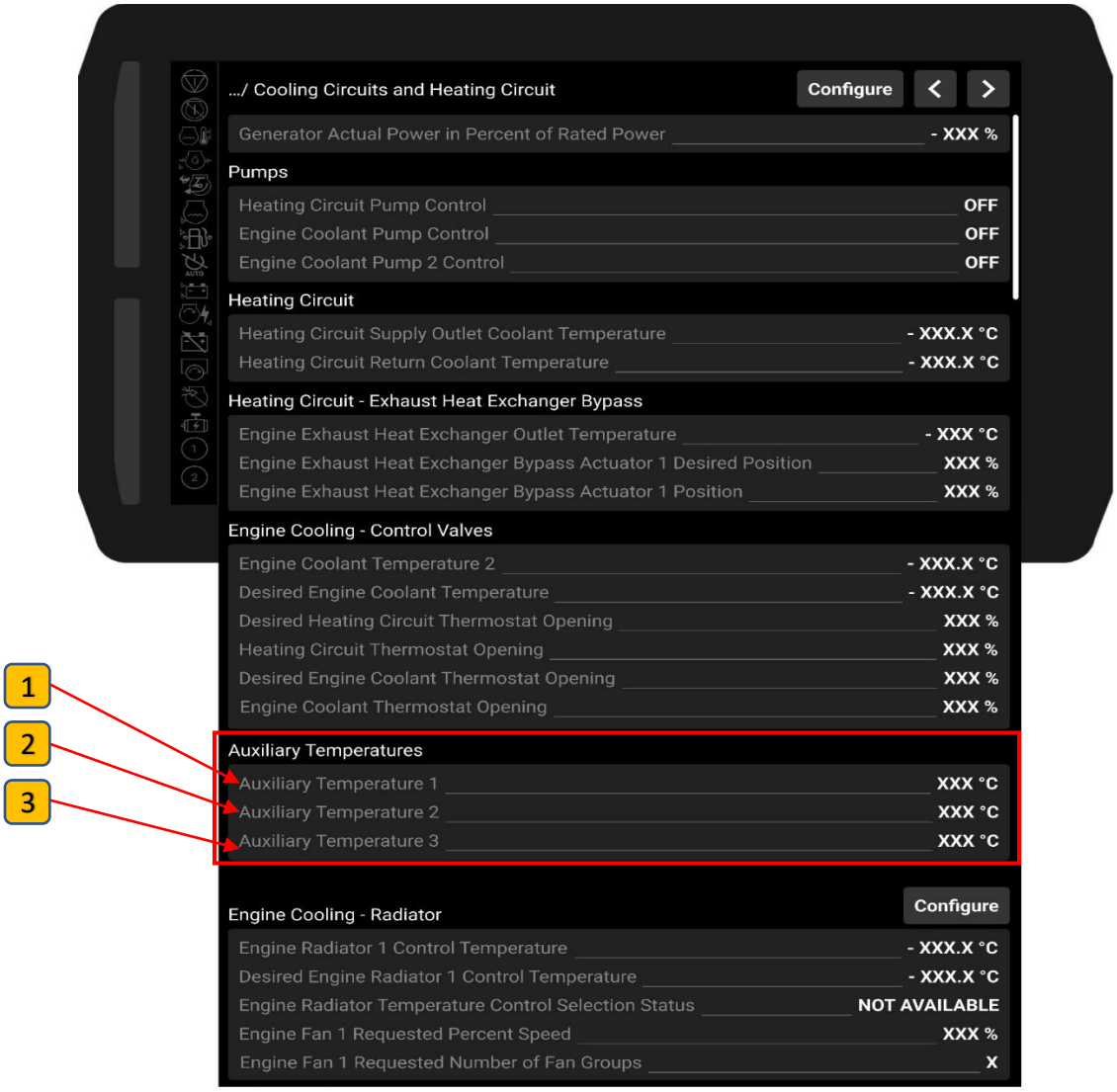

Figure 14.4 Auxiliary Temperature Overview Parameters

©2025 Caterpillar. All rights reserved.

Caterpillar: Confidential Green

The following table describes the unit and ranges associated with each parameter.

Table 14.7 Auxiliary Temperature Overview Parameters

Ref	Parameter Name	Unit	Valid Data Range
1	Auxiliary Temperature 1	°C	-40 to 210 °C
2	Auxiliary Temperature 2	°C	-40 to 210 °C
3	Auxiliary Temperature 3	°C	-40 to 210 °C

Note: This section only covers the parameters associated with auxiliary temperature as highlighted in the figure 14.4. For the details about parameters associated with other engine colling circuit and heating circuit refer to related sections within this manual.

Note: The show/hide rules for the section 14.6.1 and 14.6.2 will remain same as mentioned in the section 5.7.1 “SCAC Valve Control Overview Parameters”. Hence it is not explicitly explained in this section.

14.6.3 Auxiliary Temperature User Configurable Parameters

The controller supports the following configurable parameters relating to auxiliary temperature sensors.

The HMI has the ability to view the parameters associated with auxiliary temperature via the engine cooling circuit and heating circuit configuration screen. All the possible settings related to auxiliary temperature displayed in this configure screen.

These parameters are tied with observer level security. i.e., these parameters are view only parameters on the engine cooling circuits and heating circuit configure screen and cannot be updated.

To view the parameter values, the user can access the configure screen by navigating to:
Menu → Configure → Balance of Plant → Engine Cooling Circuit and Heating Circuit.

The following Figure 14.5 shows the engine cooling circuit and heating circuit configure screen. The user needs to use scroll bar to view and edit the data.

Note: The highlighted parameters in the Figure 14.5 are related to auxiliary temperature and are described in this section. However, for other parameter details refer to related section of this manual. For show/hide rules and other details refer to section 5.7.2.

©2025 Caterpillar. All rights reserved.

Caterpillar: Confidential Green

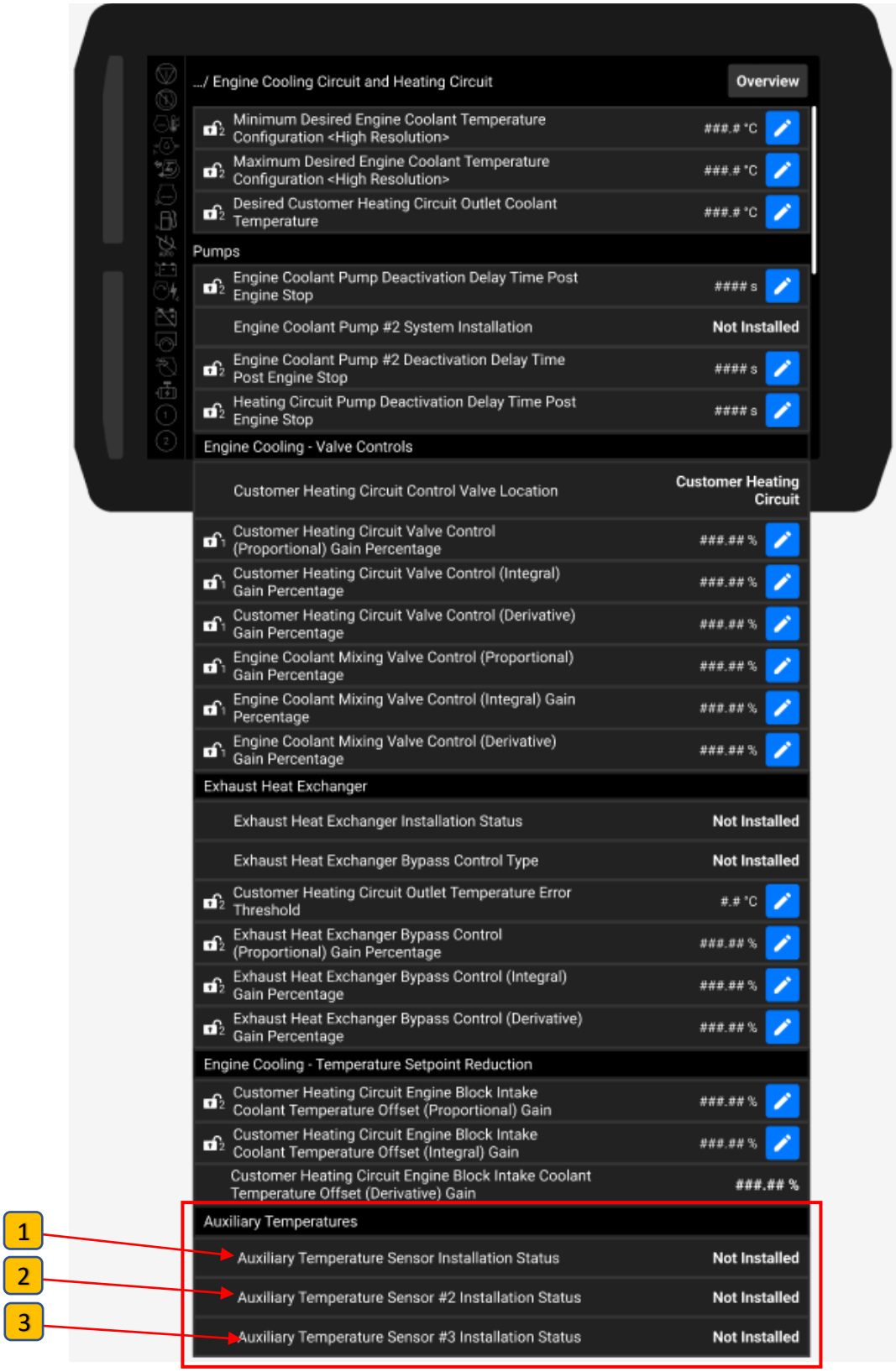

Figure 14.5 Auxiliary Temperature Parameters – (Under Configure Screen)

©2025 Caterpillar. All rights reserved.

Caterpillar: Confidential Green

The following table describes the unit and ranges associated with each parameter.

Table 14.8 Auxiliary Temperature Parameters (Under Configure Screen)

Ref	Parameter Name	Unit	Access Level	Resolution	Range
1	Auxiliary Temperature Sensor Installation Status	-	Observer	-	Installed Not Installed
2	Auxiliary Temperature Sensor #2 Installation Status	-	Observer	-	Installed Not Installed
3	Auxiliary Temperature Sensor #3 Installation Status	-	Observer	-	Installed Not Installed

©2025 Caterpillar. All rights reserved.

Caterpillar: Confidential Green

15.0 Balance of Plant Ethernet IO Module

Balance of Plant control requires the use of ethernet I/O modules. These modules are connected to ethernet port #3 on the Generator Set controller and are programmed via Cat Electronic Technician (ET) from the Paralleling controller (See Figure 15.1). The BoP I/O controller is designed to be modular with functionality split into three different I/O Modules.

a. Cooling modules (for power generation plants)
b. Extension module for heat utilization and/or genset enclosure ventilation
c. CHP Module (including genset enclosure ventilation)

The I/O functionality is fixed and mapped to specific BoP functions and are not freely configurable. BoP function can be enabled/disabled via Cat ET or the HMI configuration screens.

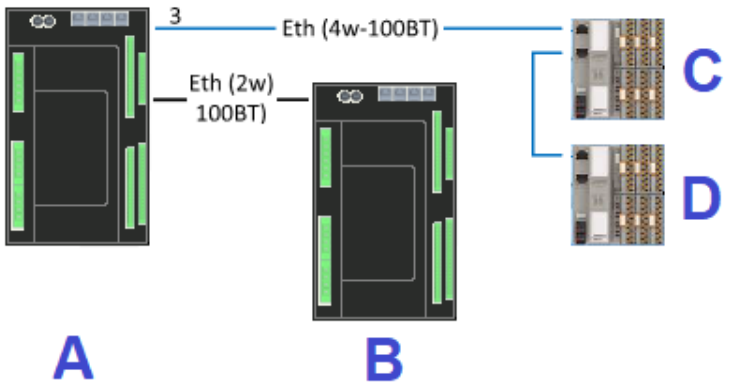

Figure 15.1 Cat® ECS 200 Ethernet Based Remote Module Connections

A. Generator Set Controller
B. Paralleling Controller
C. Remote I/O Module
D. BoP I/O Module

To program the remote I/O module (Programmed from the paralleling controller), Cat ET must be connected to the paralleling controller. The list of options available to program any input or output will be determined by which controller is connected to Cat ET. See Table 15.1 for the IP address assignments for each configuration.

Table 15.1 Ethernet Based Remote Module Configuration Codes and IP Addresses

Controller	IP Address	Configuration Code
Generator Set	192.168.0.002	1
	192.168.0.003	8
	192.168.0.004	10
	192.168.0.005	11
Paralleling	192.168.0.018	1
	192.168.0.019	8
	192.168.0.020	10
	192.168.0.021	11
	192.168.0.034	Grid Code
	192.168.0.035	CHP & Container (CHP Extension Module)
	192.168.0.036	JW & SCAC (Cooling Module)
	192.168.0.037	JW, SCAC, CHP, Container (Cooling and CHP Module)

©2025 Caterpillar. All rights reserved.

Caterpillar: Confidential Green

Note: If the I/O module is getting an expansion card added, this must be done with the power off. After turning the power back on, the new I/Os must be programmed. The bus coupler fixed IP address must match the remote input/output configuration code.

If replacing a damaged card, the new card must be physically placed in the same slot as the old one. Each card has an assigned order and must be installed accordingly. Table 15.2, 15.3, and 15.4 shows the ethernet based remote module card assignment for the paralleling controller.

Table 15.2 Configuration Code (CHP & Container)

Modbus Coupler	Digital Outputs	Analog Outputs	Analog Inputs
	1	3	5
	2	4	6
	Digital Inputs	Digital Inputs	Analog Inputs

Table 15.3 Configuration Code (JW & SCAC)

Modbus Coupler	Digital Outputs	Digital Outputs	Analog Outputs
	1	3	5
	2	4	6
	Digital Inputs	Slot Cover	Analog Inputs

Table 15.4 Configuration Code (JW, SCAC, CHP, Container)

Modbus Coupler	Digital Outputs	Digital Outputs	Analog Outputs	Analog Outputs	Slot Cover
	1	3	5	1	3
	2	4	6	2	4
	Digital Inputs	Digital Inputs	Analog Inputs	Analog Inputs	Analog Inputs

15.1 Configuration Code (CHP & Container) IO Module

Total Number of IO supported for CHP & Container are:
Digital Inputs: 32
Digital Outputs: 16
Analog Inputs: 8
Analog Outputs: 4

IP Address: 192.168.0.035

The following table defines the pin information associated with each card for the CHP & Container IO module:

©2025 Caterpillar. All rights reserved.

Caterpillar: Confidential Green

Table 15.5 CHP & Container IO Card Details

Card 1: Digital Output	
PIN	**Function**
1	Not Used
2	Not Used
3	Not Used
4	Not Used
5	Not Used
6	Not Used
7	Not Used
8	Customer Site Heating Circuit Pump Control
9	Engine Coolant Pump Control
10	Genset Enclosure Recirculation Louver Actuator 1 Direction Close
11	Genset Enclosure Recirculation Louver Actuator 1 Direction Open
12	Room Ventilation (VCR) Start signal
13	Ventilation Louver Actuator 1 Direction Close
14	Ventilation Louver Actuator 1 Direction Open
15	Ventilation Louver Actuator 2 Direction Close
16	Ventilation Louver Actuator 2 Direction Open
Card 2: Digital Input	
PIN	**Function**
1	Not Used
2	Not Used
3	Not Used
4	Not Used
5	Not Used
6	Not Used
7	Not Used
8	Not Used
9	Not Used
10	Not Used
11	Not Used
12	Not Used
13	Customer Site Heating Circuit Thermostat Opening 0%
14	Customer Site Heating Circuit Thermostat Opening 100%
15	Customer Site Heating Circuit Differential pump pressure Switch
16	Customer Site Heating Circuit Pump Failed Indicator
Card 3: Analog Output	
PIN	**Function**
1	Desired Customer Site Heating Circuit Thermostat Opening
2	Exhaust Bypass Actuator 1 Desired Position
3	Engine Room Fan 1 Requested Percent Speed
4	Not Used

©2025 Caterpillar. All rights reserved.

Caterpillar: Confidential Green

Card 4: Digital Input	
PIN	**Function**
1	Engine Coolant Level 2
2	Engine Coolant Pump Failed Indicator
3	EHW Coolant Level 1
4	Exhaust Bypass Actuator 1 Position Closed
5	Exhaust Bypass Actuator 1 Position Open
6	Room Ventilation Fault
7	Ventilation Louver Actuator 1 Position closed
8	Ventilation Louver Actuator 1 Position open
9	Ventilation Louver Actuator 2 Position closed
10	Ventilation Louver Actuator 2 Position open
11	Ventilation Recirculation Louver Actuator 1 Position Closed
12	Ventilation Recirculation Louver Actuator 1 Position Open
13	Smoke Alarm
14	Ventilation Override
15	Not Used
16	Not Used

Card 5: Analog Input	
PIN	**Function**
1	Customer Site Heating Circuit Inlet Coolant Temperature
2	Customer Site Heating Circuit Outlet Coolant Temperature
3	Engine Room Intake 1 Air Temperature
4	Engine Room Outlet 1 Air Temperature

Card 6: Analog Input	
PIN	**Function**
1	Auxiliary #1 Temperature Sensor
2	Auxiliary #2 Temperature Sensor
3	Auxiliary #3 Temperature Sensor
4	Exhaust gas temperature after exhaust heat exchanger

15.2 Configuration Code (JW & SCAC) IO Module

Total Number of IO supported for JW & SCAC are:
Digital Inputs: 16
Digital Outputs: 32
Analog Inputs: 4
Analog Outputs: 4

IP Address: 192.168.0.036

The following table defines the pin information associated with each card for the JW & SCAC IO module:

©2025 Caterpillar. All rights reserved.

Caterpillar: Confidential Green

Table 15.6 JW & SCAC IO Card Details

Card 1: Digital Output	
PIN	**Function**
1	Engine Circuit Pump Control
2	Radiator Start Signal
3	Separate Circuit Aftercooler Coolant Pump Control
4	SCAC Radiator Start signal
5	Not Used
6	Not Used
7	Not Used
8	Not Used
9	Not Used
10	Not Used
11	Not Used
12	Not Used
13	Not Used
14	Not Used
15	Not Used
16	Not Used
Card 2: Digital Input	
PIN	**Function**
1	Engine Circuit Differential pump pressure Switch
2	Engine Circuit Level 1
3	Engine Circuit Pump Failed Indicator
4	Engine Circuit Thermostat Opening 0%
5	Engine Circuit Thermostat Opening 100%
6	Radiator Failed Indicator
7	Engine Charge Air Cooler Thermostat Opening 0%
8	Engine Charge Air Cooler Thermostat Opening 100%
9	SCAC Coolant Level
10	SCAC Differential pressure Switch
11	SCAC Pump Failed Indicator
12	SCAC Radiator Failed Indicator
13	Not Used
14	Not Used
15	Not Used
16	Not Used
Card 3: Digital Output	
PIN	**Function**
1	Engine Radiator 1 Fan 1
2	Engine Radiator 1 Fan 2
3	Engine Radiator 1 Fan 3
4	Engine Radiator 1 Fan 4
5	Engine Radiator 1 Fan 5
6	Engine Radiator 1 Fan 6

©2025 Caterpillar. All rights reserved.

Caterpillar: Confidential Green

PIN	Function
7	Engine Radiator 1 Fan 7
8	Engine Radiator 1 Fan 8
9	SCAC Radiator 2 Fan 1
10	SCAC Radiator 2 Fan 2
11	SCAC Radiator 2 Fan 3
12	SCAC Radiator 2 Fan 4
13	SCAC Radiator 2 Fan 5
14	SCAC Radiator 2 Fan 6
15	SCAC Radiator 2 Fan 7
16	SCAC Radiator 2 Fan 8
Card 4: Slot Cover	
Card 5: Analog Output	
PIN	**Function**
1	Engine Circuit 3-Way Valve Control
2	Engine Fan 1 Requested Percent Speed
3	3-Way Valve Control
4	SCAC Radiator VFD Control
Card 6: Analog Input	
PIN	**Function**
1	Engine Circuit Temperature (High Resolution)
2	Engine Fan 1 Control Temperature
3	Engine Intercooler Temperature
4	SCAC Fan 2 Control Temperature

15.3 Configuration Code (JW, SCAC, CHP, Container) IO Module

Total Number of IO supported for JW, SCAC, CHP & Container are:
Digital Inputs: 32
Digital Outputs: 32
Analog Inputs: 12
Analog Outputs: 8

IP Address: 192.168.0.037

The following table defines the pin information associated with each card for the JW, SCAC, CHP & Container IO module:

©2025 Caterpillar. All rights reserved.

Caterpillar: Confidential Green

Table 15.7 JW, SCAC, CHP, Container IO Card Details

6 Slot Carrier Card 1: Digital Output	
PIN	**Function**
1	Engine Circuit Pump Control
2	Radiator Start signal DO
3	Separate Circuit Aftercooler Coolant Pump Control
4	SCAC Radiator Start signal
5	Not Used
6	Not Used
7	Not Used
8	Customer Site Heating Circuit Pump Control
9	Engine Coolant Pump Control
10	Genset Enclosure Recirculation Louver Actuator 1 Direction Close
11	Genset Enclosure Recirculation Louver Actuator 1 Direction Open
12	Room Ventilation (VCR) Start signal
13	Ventilation Louver Actuator 1 Direction Close
14	Ventilation Louver Actuator 1 Direction Open
15	Ventilation Louver Actuator 2 Direction Close
16	Ventilation Louver Actuator 2 Direction Open
6 Slot Carrier Card 2: Digital Input	
PIN	**Function**
1	Engine Circuit Differential pump pressure Switch
2	Engine Circuit Level 1
3	Engine Circuit Pump Failed Indicator
4	Engine Circuit Thermostat Opening 0%
5	Engine Circuit Thermostat Opening 100%
6	Radiator Failed Indicator
7	Engine Charge Air Cooler Thermostat Opening 0%
8	Engine Charge Air Cooler Thermostat Opening 100%
9	SCAC Coolant Level
10	SCAC Differential pressure Switch
11	SCAC Pump Failed Indicator
12	SCAC Radiator Failed Indicator
13	Customer Site Heating Circuit Thermostat Opening 0%
14	Customer Site Heating Circuit Thermostat Opening 100%
15	Customer Site Heating Circuit Differential pump pressure Switch
16	Customer Site Heating Circuit Pump Failed Indicator
6 Slot Carrier Card 3: Digital Output	
PIN	**Function**
1	Engine Radiator 1 Fan 1
2	Engine Radiator 1 Fan 2
3	Engine Radiator 1 Fan 3
4	Engine Radiator 1 Fan 4
5	Engine Radiator 1 Fan 5
6	Engine Radiator 1 Fan 6
7	Engine Radiator 1 Fan 7
8	Engine Radiator 1 Fan 8

©2025 Caterpillar. All rights reserved.

Caterpillar: Confidential Green

PIN	Function
9	SCAC Radiator 2 Fan 1
10	SCAC Radiator 2 Fan 2
11	SCAC Radiator 2 Fan 3
12	SCAC Radiator 2 Fan 4
13	SCAC Radiator 2 Fan 5
14	SCAC Radiator 2 Fan 6
15	SCAC Radiator 2 Fan 7
16	SCAC Radiator 2 Fan 8
6 Slot Carrier Card 4: Digital Input	
PIN	**Function**
1	Engine Coolant Level 2
2	Engine Coolant Pump Failed Indicator
3	EHW Coolant Level 1
4	Exhaust Bypass Actuator 1 Position Closed
5	Exhaust Bypass Actuator 1 Position Open
6	Room Ventilation Fault
7	Ventilation Louver Actuator 1 Position closed
8	Ventilation Louver Actuator 1 Position open
9	Ventilation Louver Actuator 2 Position closed
10	Ventilation Louver Actuator 2 Position open
11	Ventilation Recirculation Louver Actuator 1 Position Closed
12	Ventilation Recirculation Louver Actuator 1 Position Open
13	Smoke Alarm
14	Gas Alarm Level 1
15	Gas Alarm Level 2
16	Not Used
6 Slot Carrier Card 5: Analog Output	
PIN	**Function**
1	Engine Circuit 3-Way Valve Control
2	Engine Fan 1 Requested Percent Speed
3	3-Way Valve Control
4	SCAC Radiator VFD Control
6 Slot Carrier Card 6: Analog Input	
PIN	**Function**
1	Engine Circuit Temperature (High Resolution)
2	Engine Fan 1 Control Temperature
3	Engine Intercooler Temperature
4	SCAC Fan 2 Control Temperature
4 Slot Carrier Card 1: Analog Output	
PIN	**Function**
1	Desired Customer Site Heating Circuit Thermostat Opening
2	Exhaust Bypass Actuator 1 Desired Position
3	Engine Room Fan 1 Requested Percent Speed
4	Not Used

©2025 Caterpillar. All rights reserved.

Caterpillar: Confidential Green

4 Slot Carrier Card 2: Analog Input	
PIN	**Function**
1	Customer Site Heating Circuit Inlet Coolant Temperature
2	Customer Site Heating Circuit Outlet Coolant Temperature
3	Engine Room Intake 1 Air Temperature
4	Engine Room Outlet 1 Air Temperature
5 Slot Carrier Card 3: Slot Cover	
6 Slot Carrier Card 4: Analog Input	
PIN	**Function**
1	Auxiliary #1 Temperature Sensor
2	Auxiliary #2 Temperature Sensor
3	Auxiliary #3 Temperature Sensor
4	Exhaust gas temperature after exhaust heat exchanger

15.4 HMI Display Requirements/Concepts

The Balance of Plant IO (Input/Output) overview screen displays all the possible IO status parameters associated with the BoP. Following are the Balance of Plant IO status available on the HMI screen:

- Balance of Plant Digital Input
- Balance of Plant Digital Output
- Balance of Plant Analog Input
- Balance of Plant Analog Output

The screen requirements for the BoP IO functions are like the onboard IO or Remote IO mentioned in the HMI manual. The user can go to the BoP IO screens by navigating to (See Figure 15.2):
Menu → Overviews → IO Overview.

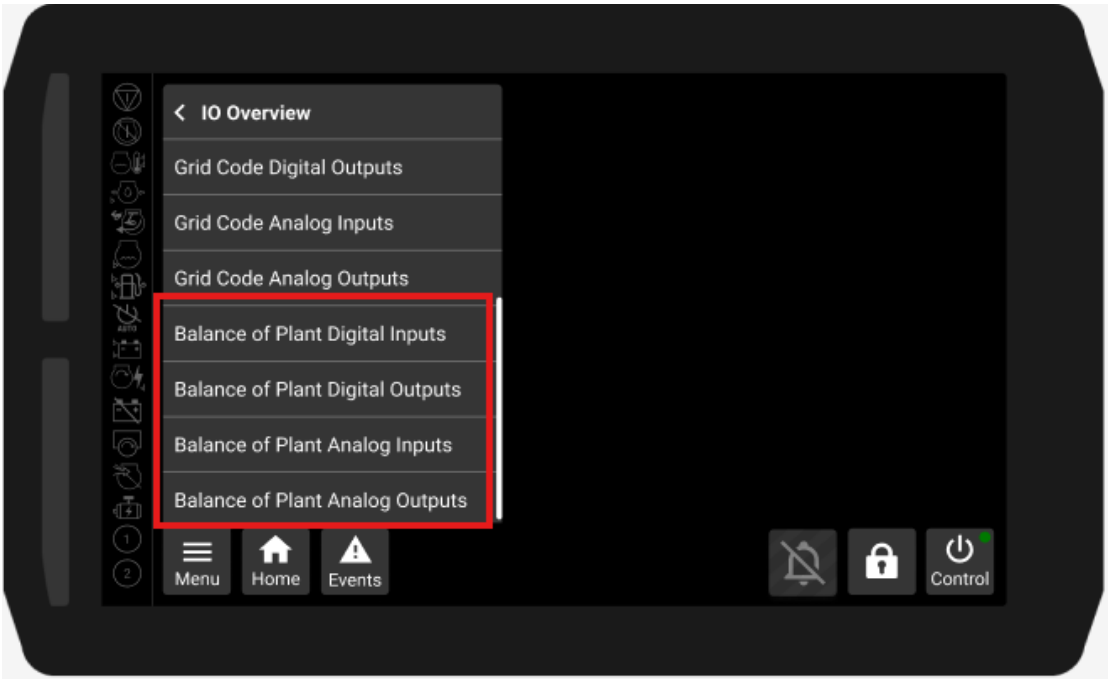

Figure 15.2 IO Overview Submenu – Balance of Plant

©2025 Caterpillar. All rights reserved.

Caterpillar: Confidential Green

The user then can choose the required BoP IO screens to view the status from HMI.

15.4.1 General Display Requirements

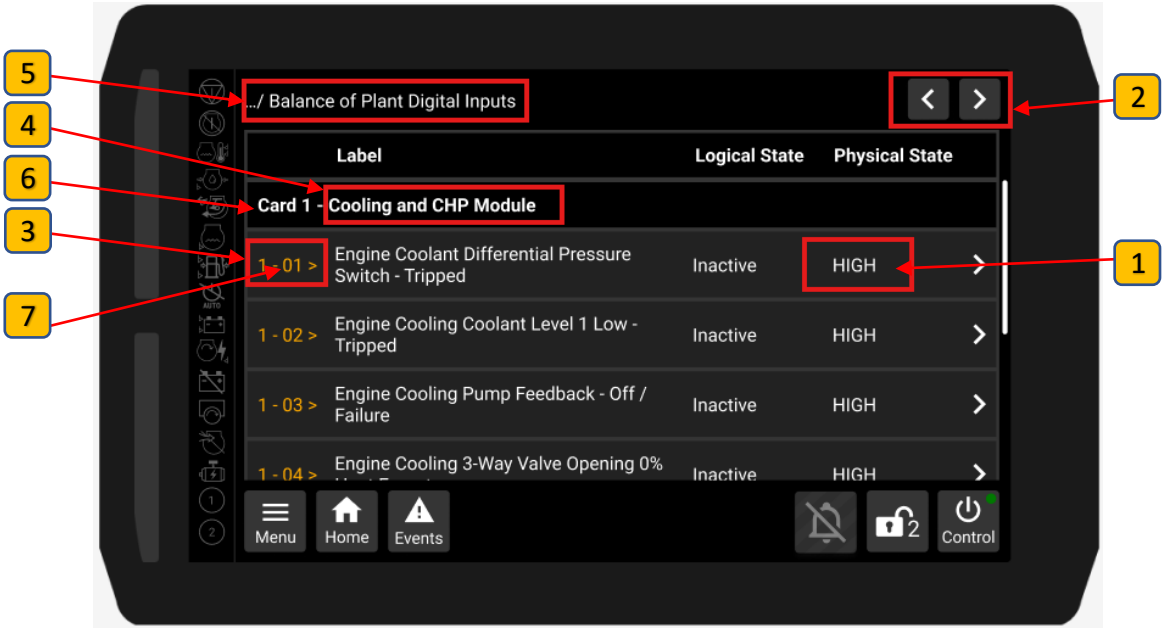

Figure 15.3 General Display Requirements Highlights

<u>Decimal Places and Total Number of Digits</u>

On the mockups the can see the exact number of numerical values supported for each parameter. The digital I/O screen shows logical state and physical state while the analog I/O screen shows the actual value and analog value for each parameters.

- For the digital I/O: Physical states are 'HIGH' or 'LOW' (Refer to Figure 15.3 [1]).
- For the analog I/O: All signals are defined as 4 to 20 mA signals with range 0 to 24 mA, thus 2 digits + 1 decimal place. (For illustration refer to Analog I/O screens).

<u>Arrow Buttons</u>

For all the Balance of Plant I/O screens arrow buttons are added in the upper right corner. This allows users to scroll through the subgroup of Balance of Plant I/O screens located within the I/O overview submenu without opening the IO submenu(Refer to Figure 15.3 [2]).

<u>Numbering of I/O Ports</u>

In order to uniquely identify a signals I/O port, each screens contains information on I/O type and I/O module. To easily identify the ports associated with each card labels are defined as "x-yy" (Refer to Figure 15.3 [3] and [7]):

Where,

- **x** - Represents the cards position number in the sequence of identical card type, e.g. Digital Input card "2" of three : "<2 – yy >".
- **yy** - Represents the port on a card according to predefined card type, e.g. port number 5 of 16: "x – 05 >".

©2025 Caterpillar. All rights reserved.

Caterpillar: Confidential Green

Identification of I/O

As mentioned in the section 15.0 BOP has three different hardware I/O modules (JW+SCAC, CHP+Container, and JWC+SCAC+CHP+Container). I/O screens must clearly indicate to which hardware I/O block a signal belongs. "Balance of Plant Ethernet Input/Output Configuration Code" identifies the configuration, which can also be completely disabled.

In order to uniquely identify a physical port, the following information is available on the BoP I/O screens:
I/O module Type (Refer to Figure 15.3 [4])
Card (I/O) Type (Refer to Figure 15.3 [5])
Card Number (Refer to Figure 15.3 [6])
Port Number (Refer to Figure 15.3 [7])

Show/Hide Rules

1. Digital I/O Screens: For example refer to Figure 15.4

Table 15.8 Show/Hide Rules for Digital I/O Screens

Ref	HMI Display Name (Label Column)	Logical State	Physical State	Description
1	<Label>	'----'	'----'	Loss of Communications
2	'Disabled'	blank	<value>	Port disabled due to individual configuration
3	blank	blank	<value>	Unassigned port
4	<Label>	'****'	'****'	Fault Feedback I/O Controller

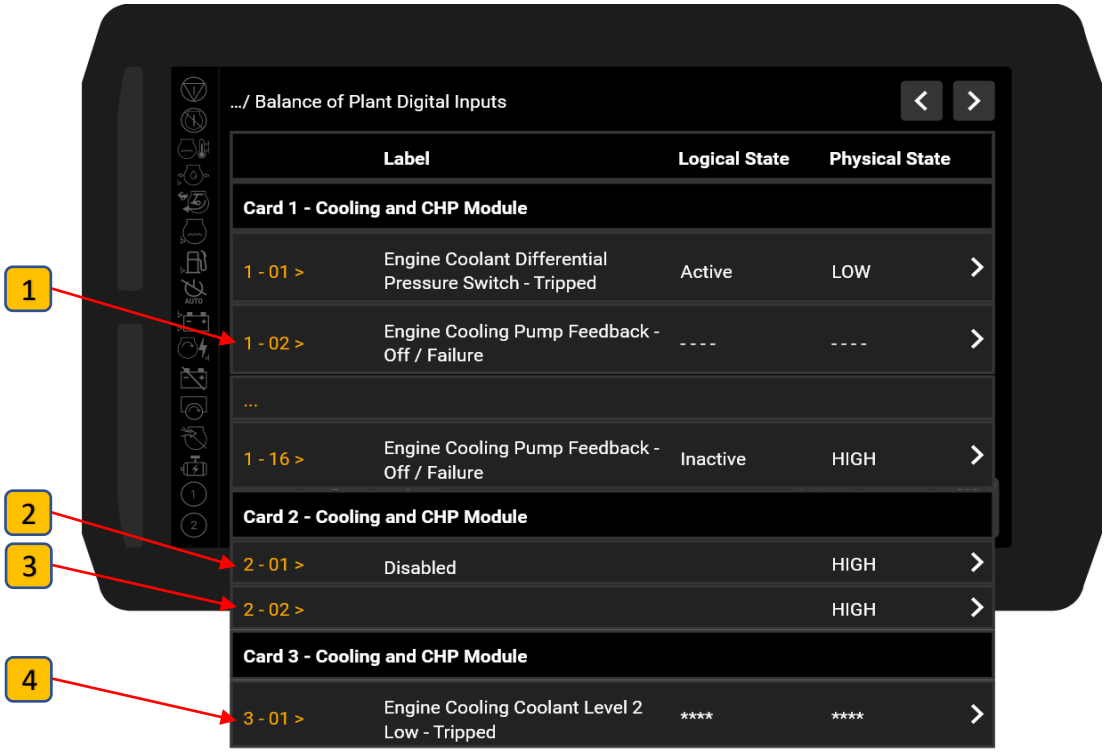

Figure 15.4 Digital I/O Show/Hide Visualization

©2025 Caterpillar. All rights reserved.

Caterpillar: Confidential Green

2. Analog I/O Screens: For example refer to Figure 15.5

Table 15.9 Show/Hide Rules for Analog I/O Screens

Ref	HMI Display Name (Label Column)	Actual Value	Analog Value	Description
1	<Label>	'----'	'----'	Loss of Communications
2	'Disabled'	blank	<value>	Port disabled due to individual configuration
3	blank	blank	<value>	Unassigned port
4	<Label>	'****'	'****'	Fault Feedback I/O Controller

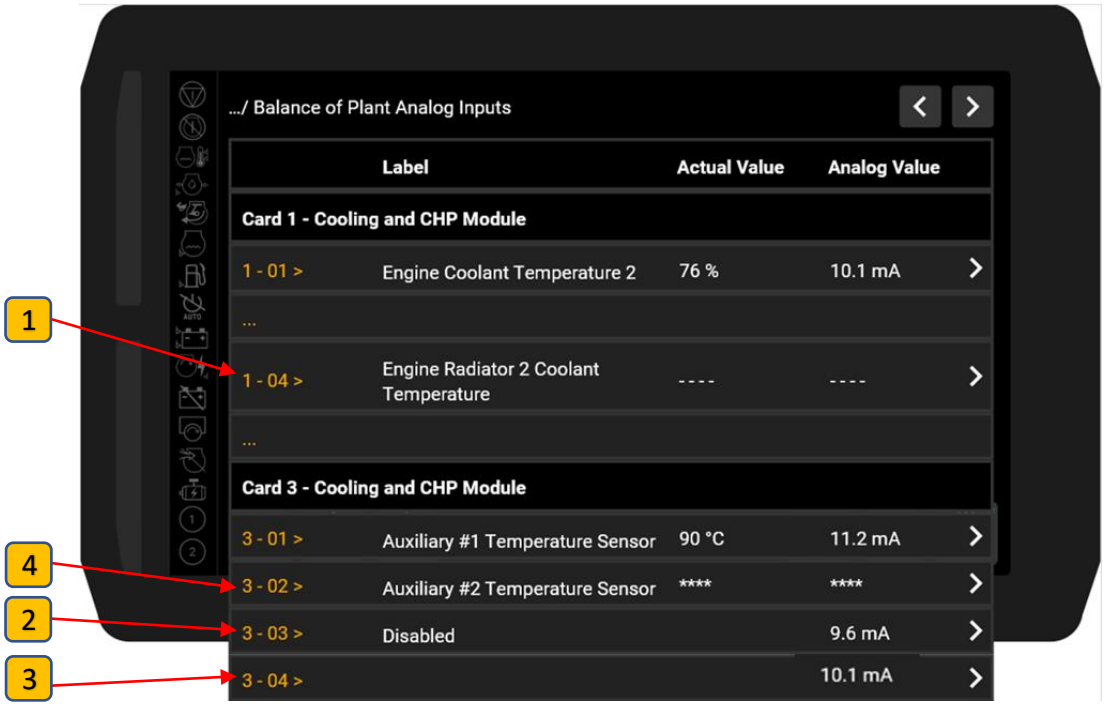

Figure 15.5 Analog I/O Show/Hide Visualization

Boot-Up Behavior

During system power-up, until valid values are received for the first time the user will not be able to:

- See any values until the system is ready to show real (sensor) data.
- See values that are not sent to the I/O Modules.

I/O Controller Availability

For Balance of Plant there are three different hardware I/O module options available, that define available I/Os as well as the fixed order of its entries. I/O modules are named as follows:

- **Cooling Module** – contains I/O needed for pure engine cooling (jacket water cooling, separate circuit aftercooler circuit) with its various options for heat removal.

©2025 Caterpillar. All rights reserved.

Caterpillar: Confidential Green

- **CHP Extension Module** – extends the cooling module towards a CHP. It adds the necessary I/Os to use combustion heat from cooling circuits and exhaust gas in a heating circuit to control genset enclosure ventilation
- **Cooling and CHP Module** – combines the above functions in a single hardware block with the lowest possible amount of unused I/O.

Available I/O modules on the HMI screen are identified via "Balance of Plant Ethernet Input/Output Configuration Code" value as follows. This setpoint can be configured using Cat ET.

If Configuration Code value = 0: No Balance of Plant I/O Hardware module expected – all Balance of Plant I/O screens and navigation entries are hidden.

If Configuration Code value = 1: Balance of Plant Cooling Module
- HMI will display all sections labeled "**Card** X **– Cooling Module**" where "X" represents one card out of the number of cards of the same I/O type as listed in the table 15.10 below.
- HMI will display all ports that belong to a section "**Card X – Cooling Module**" as defined within the chapters for the different I/O screens.

If Configuration Code value = 2: Balance of Plant Combined Heat, Power and Ventilation Module
- HMI will display all sections labeled "**Card** X **– CHP Extension Module**" where "X" represents one card out of the number of cards of the same I/O type as listed in the table 15.10 below.
- HMI will display all ports that belong to a section "**Card X – CHP Extension Module**" as defined within the chapters for the different I/O screens.

If Configuration Code value = 3: Balance of Plant Cooling Module + Balance of Plant Combined Heat, Power and Ventilation Module
- HMI will display all sections labeled "**Card** X **– Cooling Module**" OR "**Card** X **– CHP Extension Module**" where "X" represents one card out of the number of cards of the same I/O type as listed in the table 15.10 below.
- HMI will display all ports that belong to a section "**Card** X **– Cooling Module**" OR "**Card X – CHP Extension Module**" as defined within the chapters for the different I/O screens.

If Configuration Code value = 4: Balance of Plant Cooling, Combined Heat, Power and Ventilation Module
- HMI will display all sections labeled "**Card** X **– Cooling and CHP Module**" where "X" represents one card out of the number of cards of the same I/O type as listed in the table 15.10 below.
- HMI will display all ports that belong to a section "**Card** X **– Cooling and CHP Module**" as defined within the chapters for the different I/O screens.

Table 15.10 Number of I/O Cards per I/O Module

I/O Module	No. of Digital Input Cards	No. of Digital Output Cards	No. of Analog Input Cards	No. of Analog Output Cards
Cooling Module	1	2	1	1
CHP Extension Module	2	1	2	1
Cooling and CHP Module	2	2	3	2

©2025 Caterpillar. All rights reserved.

Caterpillar: Confidential Green

Note: If there is a loss of communication between the controller and HMI, The HMI will display a “Loss of Communication” banner in the middle of the screen. Refer to “HMI Manual – Paralleling genset Control” for more details.

15.4.2 Balance of Plant Digital Inputs

At the BoP digital input overview screen, the BoP digital input assignments are displayed, and the user can see the logical and physical states of each digital inputs.

To access the BoP digital input overview screen via HMI display, navigate to following submenu:
Menu → Overviews → IO Overview → Balance of Plant Digital Inputs.

Figure 15.6 shows the BoP digital input overview screen. The screen consists of five sections to display BoP digital input status based on the configuration code value. In column “Logical State” the logical status (i.e. the systems internal interpretation of the real physical signal level) and In column “Physical State” the real physical signal levels are displayed.

The following figure only shows the general view of BoP digital inputs screen. Refer to show/hide section explained in the section 15.4.1 for the show/hide of data within BoP digital inputs screen.

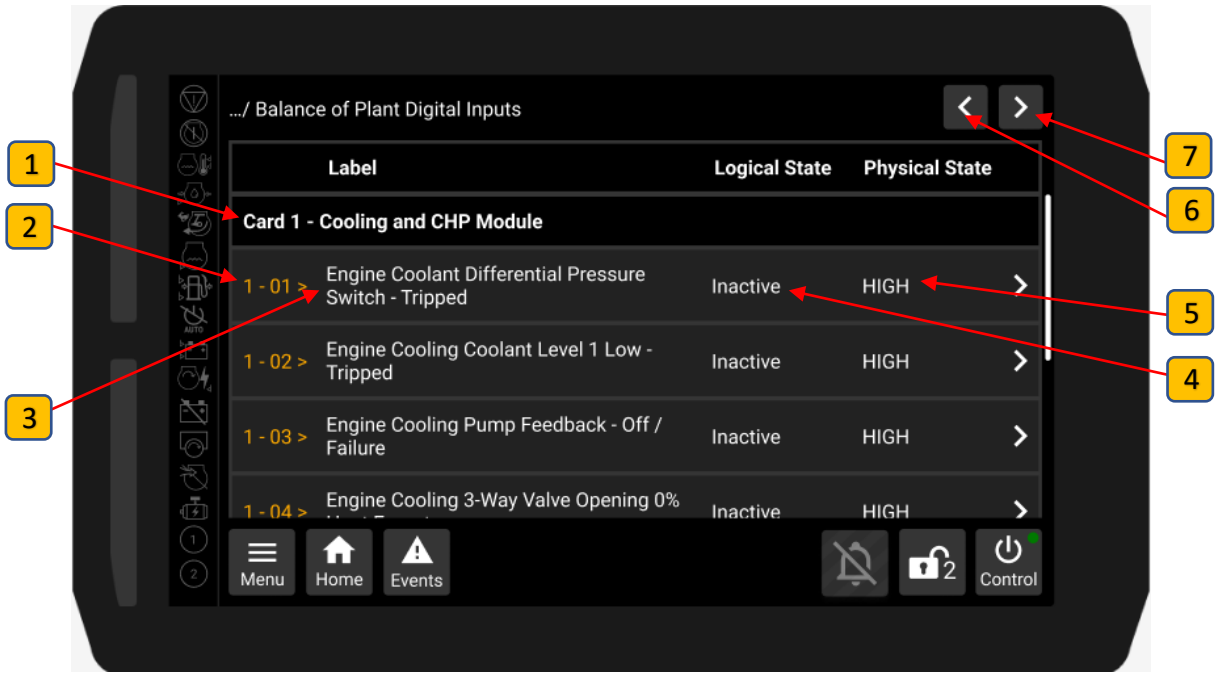

Figure 15.6 Balance of Plant Digital Inputs Screen

1. *Card Number + Module Name
2. **Card Number + Digital Input Number
3. BoP Digital Input Parameter
4. BoP Digital Input Logical State
5. BoP Digital Input Physical State
6. Shortcut to Balance of Plant Analog Output
7. Shortcut to Balance of Plant Digital Output

©2025 Caterpillar. All rights reserved.

Caterpillar: Confidential Green

*BoP digital inputs support 1 cooling module; 2 CHP extension modules; 2 cooling and CHP extension modules. Depending on the configuration code the modules are displayed. To see the full list of digital inputs the user needs to use the scroll bar.

**Each cards supports up to 16 BoP digital inputs.

15.4.3 Balance of Plant Digital Outputs

At the BoP digital output overview screen, the BoP digital output assignments are displayed, and the user can see the logical and physical states of each digital outputs.

To access the BoP digital output overview screen via HMI display, navigate to following submenu:
Menu → Overviews → IO Overview → Balance of Plant Digital Outputs.

Figure 15.7 shows the BoP digital output overview screen. The screen consists of five sections to display BoP digital output status based on the configuration code value. In column “Logical State” the logical status (i.e. the systems internal interpretation of the real physical signal level) and In column “Physical State” the real physical signal levels are displayed.

The following figure only shows the general view of BoP digital outputs screen. Refer to show/hide section explained in the section 15.4.1 for the show/hide of data within BoP digital outputs screen.

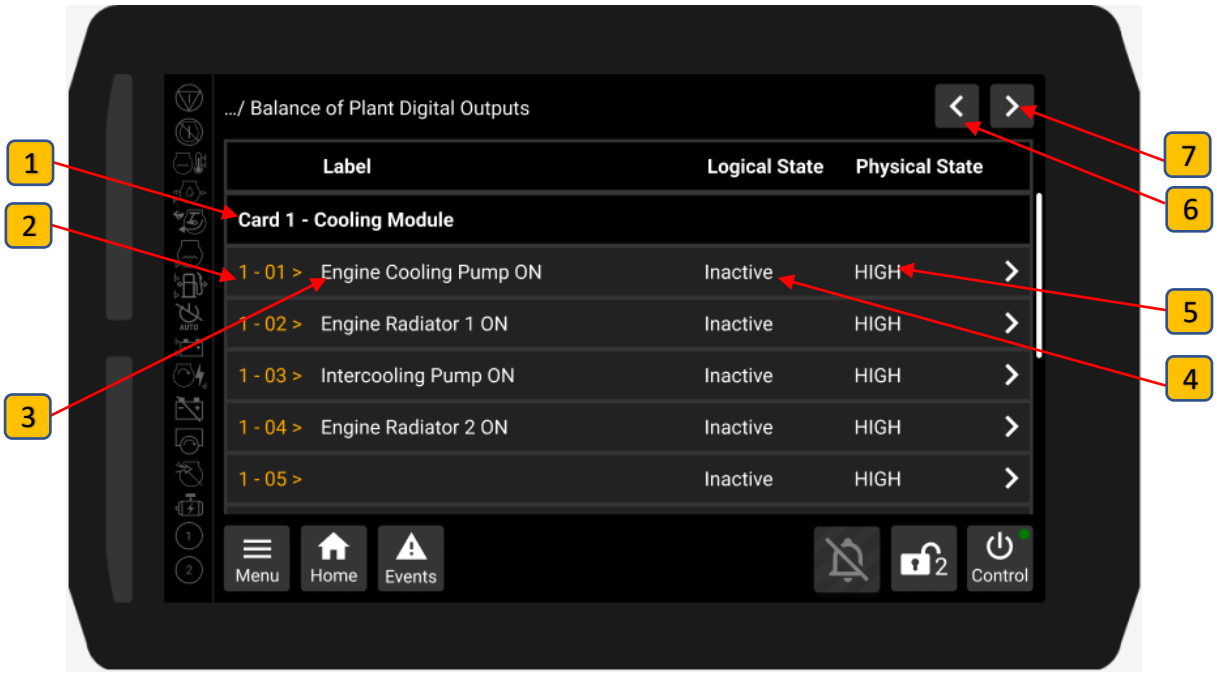

Figure 15.7 Balance of Plant Digital Outputs Screen

1. *Card Number + Module Name
2. **Card Number + Digital Output Number
3. BoP Digital Output Parameter
4. BoP Digital Output Logical State
5. BoP Digital Output Physical State
6. Shortcut to Balance of Plant Digital Output
7. Shortcut to Balance of Plant Analog Input

©2025 Caterpillar. All rights reserved.

Caterpillar: Confidential Green

*BoP digital outputs support 2 cooling module; 1 CHP extension modules; 2 cooling and CHP extension modules. Depending on the configuration code the modules are displayed. To see the full list of digital outputs the user needs to use the scroll bar.

**Each card supports up to 16 BoP digital outputs.

15.4.4 Balance of Plant Analog Inputs

At the BoP analog inputs overview screen, the BoP analog inputs assignments are displayed, and the user can see the actual value and analog value of each analog inputs.

To access the BoP analog input overview screen via HMI display, navigate to following submenu:
Menu → Overviews → IO Overview → Balance of Plant Analog Inputs.

Figure 15.8 shows the BoP analog inputs overview screen. The screen consists of six sections to display BoP analog inputs status based on the configuration code value. In column "Actual Value" the logical status (i.e. the systems internal interpretation of the real physical signal level) and In column "Analog Value" the real physical signal levels are displayed.

The following figure only shows the general view of BoP analog inputs screen. Refer to show/hide section explained in the section 15.4.1 for the show/hide of data within BoP analog inputs screen.

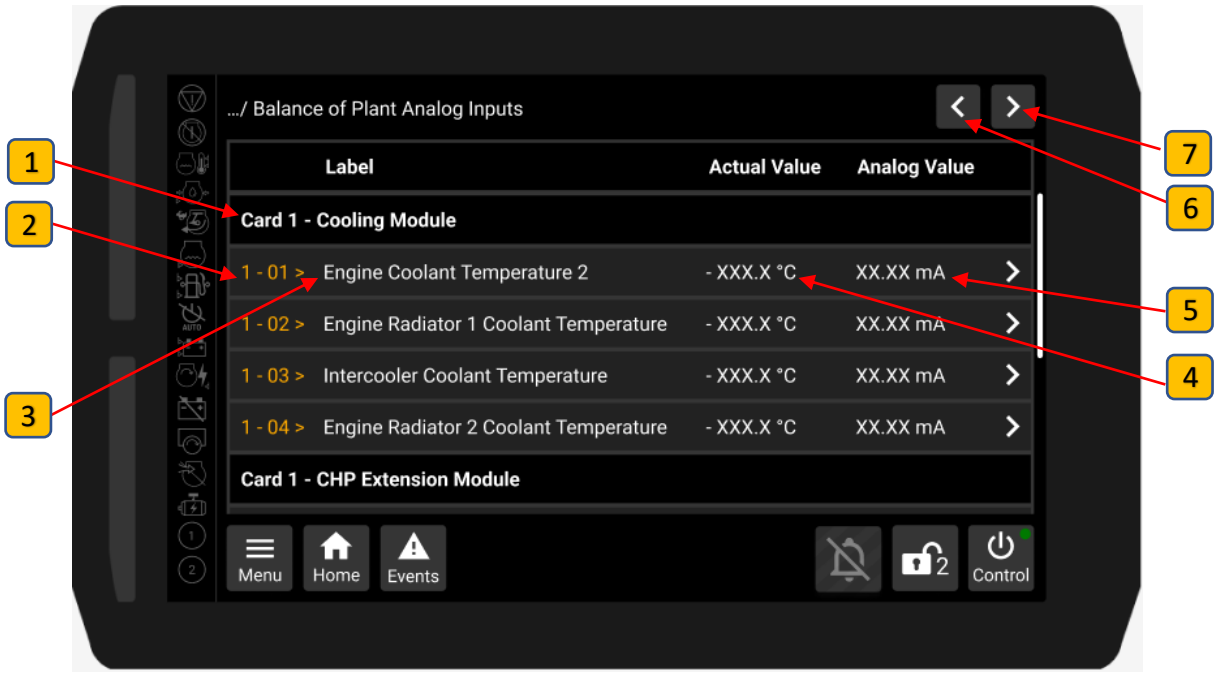

Figure 15.8 Balance of Plant Analog Inputs Screen

1. *Card Number + Module Name
2. **Card Number + Analog Input Number
3. BoP Analog Input Parameter
4. BoP Analog Input Actual Value
5. BoP Analog Input Analog Value
6. Shortcut to Balance of Plant Digital Output
7. Shortcut to Balance of Plant Analog Output

©2025 Caterpillar. All rights reserved.

Caterpillar: Confidential Green

*BoP analog inputs support 1 cooling module; 2 CHP extension modules; 3 cooling and CHP extension modules. Depending on the configuration code the modules are displayed. To see the full list of analog inputs the user needs to use the scroll bar.

**Each card supports up to 4 BoP analog inputs.

15.4.5 Balance of Plant Analog Outputs

At the BoP analog outputs overview screen, the BoP analog outputs assignments are displayed, and the user can see the actual value and analog value of each analog outputs.

To access the BoP analog output overview screen via HMI display, navigate to following submenu:
Menu → Overviews → IO Overview → Balance of Plant Analog Outputs.

Figure 15.9 shows the BoP analog outputs overview screen. The screen consists of four sections to display BoP analog outputs status based on the configuration code value. In column "Actual Value" the logical status (i.e. the systems internal interpretation of the real physical signal level) and In column "Analog Value" the real physical signal levels are displayed.

The following figure only shows the general view of BoP analog outputs screen. Refer to show/hide section explained in the section 15.4.1 for the show/hide of data within BoP analog outputs screen.

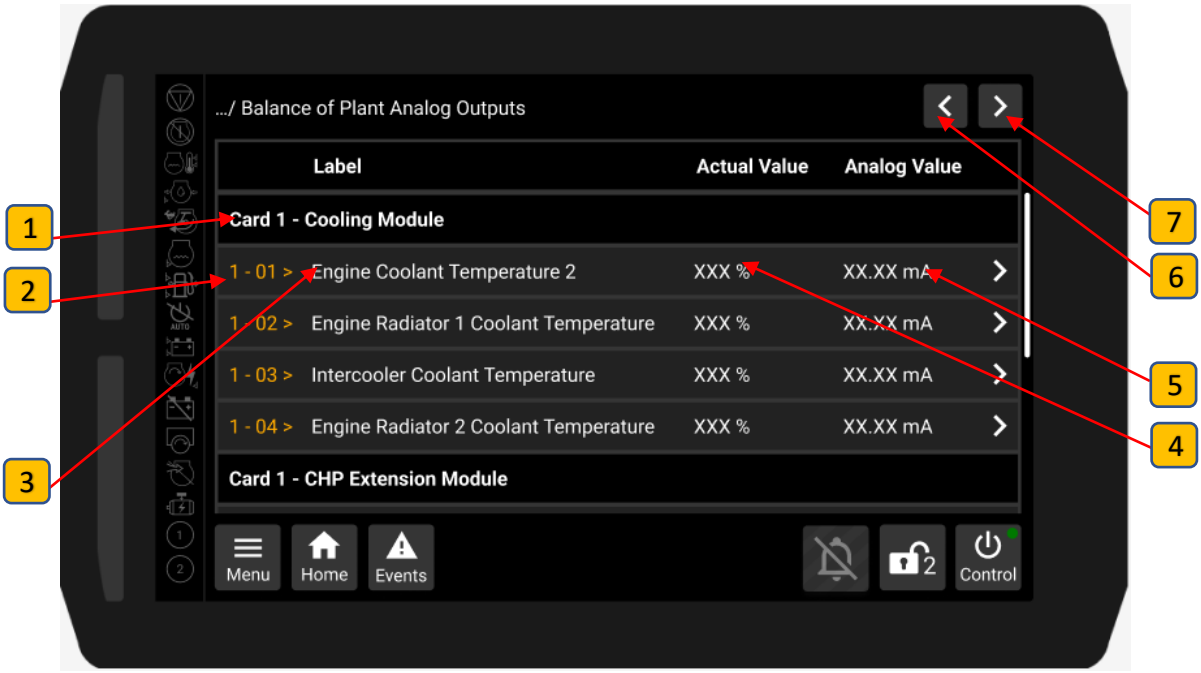

Figure 15.9 Balance of Plant Analog Outputs Screen

1. *Card Number + Module Name
2. **Card Number + Analog Output Number
3. BoP Analog Output Parameter
4. BoP Analog Output Actual Value
5. BoP Analog Output Analog Value
6. Shortcut to Balance of Plant Analog Input
7. Shortcut to Balance of Plant Digital Input

©2025 Caterpillar. All rights reserved.

Caterpillar: Confidential Green

*BoP digital inputs support 1 cooling module; 1 CHP extension modules; 2 cooling and CHP extension modules. Depending on the configuration code the modules are displayed. To see the full list of analog outputs the user needs to use the scroll bar.

**Each card supports up to 4 BoP analog outputs.

Caterpillar: Confidential Green

Caterpillar: Confidential Green

Appendix A – List of Figures

FIGURE 1.1 BALANCE OF PLANT – CHOICE OF ETHERNET I/O MODULE 9

FIGURE 2.1 SAFETY LOGO 11

FIGURE 5.1 FLOW DIAGRAM - INTERCOOLER/SCAC 16
FIGURE 5.2 TEMPERATURE SETPOINT CALCULATION CURVE – 3 WAY VALVE CONTROL 17
FIGURE 5.3 BALANCE OF PLANT SUBMENU (SEPARATE CIRCUIT AFTERCOOLER AND RADIATOR) 23
FIGURE 5.4 SEPARATE CIRCUIT AFTERCOOLER AND RADIATOR OVERVIEW SCREEN – VALVE CONTROL SECTION 23
FIGURE 5.5 SEPARATE CIRCUIT AFTERCOOLER AND RADIATOR OVERVIEW SCREEN – INVALID/ERROR DATA 25
FIGURE 5.6 SEPARATE CIRCUIT AFTERCOOLER AND RADIATOR OVERVIEW SCREEN – COMMS LOSS/BOOT UP BEHAVIOR 26
FIGURE 5.7 EXAMPLE: SEPARATE CIRCUIT AFTERCOOLER CONFIGURE SCREEN (WHEN LOCKED) 28
FIGURE 5.8 STANDARD KEYPAD (INACTIVE) 28
FIGURE 5.9 STANDARD KEYPAD (ENTERED DATA IS VALID) 29
FIGURE 5.10 STANDARD KEYPAD (ENTERED DATA IS INVALID) 29
FIGURE 5.11 SEPARATE CIRCUIT AFTERCOOLER CONFIGURE SCREEN 30

FIGURE 6.1 FLOW DIAGRAM - VFD OR SINGLE SPEED FAN RADIATOR CONTROL 32
FIGURE 6.2 TEMPERATURE SETPOINT CALCULATION CURVE – RADIATOR CONTROL 33
FIGURE 6.3 STAGED RADIATOR CONTROL ALGORITHM 35
FIGURE 6.4 TEMPERATURE SETPOINT CALCULATION CURVE – STAGED RADIATOR CONTROL 35
FIGURE 6.5 SEPARATE CIRCUIT AFTERCOOLER AND RADIATOR OVERVIEW SCREEN – RADIATOR CONTROL SECTION . 41
FIGURE 6.6 SEPARATE CIRCUIT AFTERCOOLER RADIATOR CONFIGURE SCREEN 43

FIGURE 7.1 ENGINE COOLING CIRCUIT (3-WAY VALVE & PUMP CONTROL) – WITHOUT CHP 47
FIGURE 7.2 ENGINE COOLING CIRCUIT (3-WAY VALVE & PUMP CONTROL) – WITH CHP 47
FIGURE 7.3 TEMPERATURE SETPOINT CALCULATION CURVE – 3 WAY VALVE CONTROL (ENGINE COOLING CIRCUIT) .. 48
FIGURE 7.4 BALANCE OF PLANT SUBMENU (COOLING CIRCUITS AND HEATING CIRCUITS) 55
FIGURE 7.5 COOLING CIRCUITS AND HEATING CIRCUIT OVERVIEW SCREEN – VALVE CONTROL PARAMETERS 56
FIGURE 7.6 ENGINE COOLING CIRCUIT AND HEATING CIRCUIT CONFIGURE SCREEN – VALVE CONTROL PARAMETERS 58

FIGURE 8.1 ENGINE COOLING CIRCUIT (RADIATOR CONTROL) FLOW DIAGRAMS 61
FIGURE 8.2 TEMPERATURE SETPOINT CALCULATION CURVE – VFD RADIATOR CONTROL (ENGINE COOLING CIRCUIT). 62
FIGURE 8.3 STAGED RADIATOR CONTROL ALGORITHM (ENGINE COOLING CIRCUIT) 63
FIGURE 8.4 TEMPERATURE SETPOINT CALCULATION CURVE – STAGED RADIATOR CONTROL (ENGINE COOLING CIRCUIT) 64
FIGURE 8.5 COOLING CIRCUITS AND HEATING CIRCUIT OVERVIEW SCREEN – RADIATOR CONTROL PARAMETERS 70
FIGURE 8.6 ENGINE COOLING RADIATOR CONFIGURE SCREEN 72

FIGURE 9.1 DUEL CORE RADIATOR FLOW DIAGRAM 75
FIGURE 9.2 DUAL CORE RADIATOR WITH VFD OR STAGED SWITCHING 75
FIGURE 9.3 CONTROL DEVIATION CALCULATION 76

FIGURE 10.1 HEATING CIRCUIT 3-WAY VALVE (A) IN THE HEATING CIRCUIT; (B) IN THE ENGINE COOLING CIRCUIT 81

©2024 Caterpillar. All rights reserved.

Caterpillar: Confidential Green
Caterpillar: Confidential Green

FIGURE 10.2 COOLING CIRCUITS AND HEATING CIRCUIT OVERVIEW SCREEN – HEATING CIRCUIT PARAMETERS 88
FIGURE 10.3 ENGINE COOLING CIRCUIT AND HEATING CIRCUIT CONFIGURE SCREEN - HEATING CIRCUIT PARAMETERS 90

FIGURE 11.1 CUSTOMER HEATING CIRCUIT WITH EXHAUST HEAT EXCHANGER 93
FIGURE 11.2 CUSTOMER HEATING CIRCUIT WITH EXHAUST HEAT EXCHANGER PARAMETERS 99
FIGURE 11.3 CUSTOMER HEATING CIRCUIT WITH EXHAUST HEAT EXCHANGER CONFIGURABLE PARAMETERS 101

FIGURE 12.1 FLOW DIAGRAM: CABIN VENTILATION WITHOUT RECIRCULATION 103
FIGURE 12.2 FLOW DIAGRAM: CABIN VENTILATION WITH RECIRCULATION 104
FIGURE 12.3 MINIMUM FAN SPEED CALCULATION CURVE – GENSET ENCLOSURE VENTILATION CONTROL 106
FIGURE 12.4 BALANCE OF PLANT SUBMENU (GENSET ENCLOSURE VENTILATION) 116
FIGURE 12.5 GENSET ENCLOSURE VENTILATION OVERVIEW SCREEN 117
FIGURE 12.6 GENSET ENCLOSURE VENTILATION CONFIGURE SCREEN 118

FIGURE 14.1 TRIP SETPOINT CALCULATION CURVE FOR EXHAUST GAS TEMPERATURES 124
FIGURE 14.2 BALANCE OF PLANT SUBMENU (EXHAUST GAS TEMPERATURE) 130
FIGURE 14.3 EXHAUST GAS TEMPERATURES OVERVIEW SCREEN 130
FIGURE 14.4 AUXILIARY TEMPERATURE OVERVIEW PARAMETERS 131
FIGURE 14.5 AUXILIARY TEMPERATURE PARAMETERS – (UNDER CONFIGURE SCREEN) 133

FIGURE 15.1 CAT® ECS 200 ETHERNET BASED REMOTE MODULE CONNECTIONS 135
FIGURE 15.2 IO OVERVIEW SUBMENU – BALANCE OF PLANT 143
FIGURE 15.3 GENERAL DISPLAY REQUIREMENTS HIGHLIGHTS 144
FIGURE 15.4 DIGITAL I/O SHOW/HIDE VISUALIZATION 145
FIGURE 15.5 ANALOG I/O SHOW/HIDE VISUALIZATION 146
FIGURE 15.6 BALANCE OF PLANT DIGITAL INPUTS SCREEN 148
FIGURE 15.7 BALANCE OF PLANT DIGITAL OUTPUTS SCREEN 149
FIGURE 15.8 BALANCE OF PLANT ANALOG INPUTS SCREEN 150
FIGURE 15.9 BALANCE OF PLANT ANALOG OUTPUTS SCREEN 151

©2024 Caterpillar. All rights reserved.

Caterpillar: Confidential Green
Caterpillar: Confidential Green

Appendix B – List of Tables

TABLE 5.1 3-WAY VALVE OPERATION BASED ON OUTPUT SIGNAL 17
TABLE 5.2 SCAC 3-WAY VALVE AND PUMP CONTROL SETPOINTS 18
TABLE 5.3 SCAC 3-WAY VALVE AND PUMP CONTROL DIAGNOSTICS EVENTS 20
TABLE 5.4 SCAC 3-WAY VALVE AND PUMP CONTROL STATUS EVENTS 21
TABLE 5.5 SCAC 3-WAY VALVE AND PUMP CONTROL DATA FEEDBACK 21
TABLE 5.6 SCAC 3-WAY VALVE AND PUMP CONTROL I/O SIGNALS 22
TABLE 5.7 SCAC AND RADIATOR OVERVIEW SCREEN – VALVE CONTROL PARAMETERS 24

TABLE 6.1 RADIATOR SPEED BASED ON OUTPUT SIGNAL 33
TABLE 6.2 SCAC GENERAL RADIATOR SETPOINTS 36
TABLE 6.3 SCAC VFD CONTROLLED RADIATOR SETPOINTS 37
TABLE 6.4 SCAC STAGED RADIATOR SETPOINTS (SINGLE SPEED FANS) 37
TABLE 6.5 SCAC RADIATOR CONTROL DIAGNOSTICS EVENTS 38
TABLE 6.6 SCAC VFD CONTROLLED RADIATOR STATUS EVENTS 39
TABLE 6.7 SCAC RADIATOR WITH SINGLE SPEED FANS CONTROLLED STATUS EVENTS 39
TABLE 6.8 SCAC GENERAL RADIATOR DATA FEEDBACK 40
TABLE 6.9 VFD CONTROLLED RADIATOR DATA FEEDBACK 40
TABLE 6.10 RADIATOR WITH SINGLE SPEED FANS DATA FEEDBACK 40
TABLE 6.11 SCAC RADIATOR CONTROL I/O SIGNALS 40
TABLE 6.12 SCAC AND RADIATOR OVERVIEW SCREEN – RADIATOR CONTROL PARAMETERS 42
TABLE 6.13 SCAC RADIATOR CONFIGURE SCREEN PARAMETERS 43

TABLE 7.1 ENGINE COOLING CIRCUIT 3-WAY VALVE AND PUMP CONTROL SETPOINTS 50
TABLE 7.2 ENGINE COOLING CIRCUIT 3-WAY VALVE AND PUMP CONTROL DIAGNOSTICS EVENTS 52
TABLE 7.3 ENGINE COOLING CIRCUIT 3-WAY VALVE AND PUMP CONTROL STATUS EVENTS 53
TABLE 7.4 ENGINE COOLING CIRCUIT 3-WAY VALVE AND PUMP CONTROL DATA FEEDBACK 54
TABLE 7.5 ENGINE COOLING CIRCUIT 3-WAY VALVE AND PUMP CONTROL I/O SIGNALS 54
TABLE 7.6 COOLING CIRCUITS AND HEATING CIRCUIT OVERVIEW SCREEN – VALVE CONTROL PARAMETERS 56
TABLE 7.7 ENGINE COOLING CIRCUIT AND HEATING CIRCUIT CONFIGURE SCREEN - VALVE CONTROL PARAMETERS 59

TABLE 8.1 ENGINE COOLING CIRCUIT GENERAL RADIATOR SETPOINTS 64
TABLE 8.2 ENGINE COOLING CIRCUIT VFD CONTROLLED RADIATOR SETPOINTS 65
TABLE 8.3 ENGINE COOLING CIRCUIT STAGED RADIATOR SETPOINTS (SINGLE SPEED FANS) 66
TABLE 8.4 ENGINE COOLING CIRCUIT RADIATOR CONTROL DIAGNOSTICS EVENTS 67
TABLE 8.5 ENGINE COOLING CIRCUIT VFD CONTROLLED RADIATOR STATUS EVENTS 67
TABLE 8.6 ENGINE COOLING CIRCUIT RADIATOR WITH SINGLE SPEED FANS STATUS EVENTS 68
TABLE 8.7 ENGINE COOLING CIRCUIT GENERAL RADIATOR DATA FEEDBACK 68
TABLE 8.8 ENGINE COOLING CIRCUIT VFD CONTROLLED RADIATOR DATA FEEDBACK 69
TABLE 8.9 ENGINE COOLING CIRCUIT RADIATOR WITH SINGLE SPEED FANS DATA FEEDBACK 69
TABLE 8.10 ENGINE COOLING CIRCUIT RADIATOR CONTROL I/O SIGNALS 69
TABLE 8.11 COOLING CIRCUITS AND HEATING CIRCUIT OVERVIEW SCREEN – RADIATOR CONTROL PARAMETERS 71
TABLE 8.12 ENGINE COOLING RADIATOR CONFIGURE SCREEN PARAMETERS 72

©2024 Caterpillar. All rights reserved.

Caterpillar: Confidential Green
Caterpillar: Confidential Green

TABLE 9.1 GENERAL DUAL CORE RADIATOR SETPOINTS 76
TABLE 9.2 VFD CONTROLLED RADIATOR SETPOINTS 77
TABLE 9.3 STAGED RADIATOR SETPOINTS (SINGLE SPEED FANS) 77

TABLE 10.1 CUSTOMER SITE HEATING CIRCUIT 3-WAY VALVE AND PUMP CONTROL COMMON SETPOINTS 82
TABLE 10.2 CUSTOMER SITE HEATING CIRCUIT 3-WAY VALVE AND PUMP CONTROL REGULATION SETPOINTS 84
TABLE 10.3 CUSTOMER HEATING CIRCUIT 3-WAY VALVE & PUMP CONTROL DIAGNOSTICS EVENTS 84
TABLE 10.4 CUSTOMER HEATING CIRCUIT 3-WAY VALVE & PUMP CONTROL STATUS EVENTS 86
TABLE 10.5 CUSTOMER HEATING CIRCUIT 3-WAY VALVE & PUMP CONTROL DATA FEEDBACK 86
TABLE 10.6 CUSTOMER HEATING CIRCUIT 3-WAY VALVE & PUMP CONTROL I/O SIGNALS 87
TABLE 10.7 COOLING CIRCUITS AND HEATING CIRCUIT OVERVIEW SCREEN – HEATING CIRCUIT PARAMETERS 88
TABLE 10.8 ENGINE COOLING CIRCUIT AND HEATING CIRCUIT CONFIGURE SCREEN -HEATING CIRCUIT PARAMETERS 91

TABLE 11.1 CUSTOMER HEATING CIRCUIT WITH EXHAUST HEAT EXCHANGER SETPOINTS 94
TABLE 11.2 CUSTOMER HEATING CIRCUIT WITH EXHAUST HEAT EXCHANGER DIAGNOSTICS EVENTS 96
TABLE 11.3 CUSTOMER HEATING CIRCUIT WITH EXHAUST HEAT EXCHANGER STATUS EVENTS 97
TABLE 11.4 CUSTOMER HEATING CIRCUIT WITH EXHAUST HEAT EXCHANGER DATA FEEDBACK 97
TABLE 11.5 CUSTOMER HEATING CIRCUIT WITH EXHAUST HEAT EXCHANGER I/O SIGNALS 98
TABLE 11.6 CUSTOMER HEATING CIRCUIT WITH EXHAUST HEAT EXCHANGER PARAMETERS 99
TABLE 11.7 CUSTOMER HEATING CIRCUIT WITH EXHAUST HEAT EXCHANGER CONFIGURABLE PARAMETERS 102

TABLE 12.1 GENSET ENCLOSURE VENTILATION CONTROL SETPOINTS 108
TABLE 12.2 GENSET ENCLOSURE VENTILATION CONTROL SETPOINTS – WHEN "GENSET ENCLOSURE VENTILATION ENGINE NOT RUNNING CONTROL ENABLE STATUS" IS "ENABLED" 111
TABLE 12.3 GENSET ENCLOSURE VENTILATION CONTROL DIAGNOSTICS EVENTS 112
TABLE 12.4 GENSET ENCLOSURE VENTILATION CONTROL STATUS EVENTS 113
TABLE 12.5 GENSET ENCLOSURE VENTILATION CONTROL DATA FEEDBACK 115
TABLE 12.6 GENSET ENCLOSURE VENTILATION CONTROL IO SIGNALS 115
TABLE 12.7 GENSET ENCLOSURE VENTILATION OVERVIEW SCREEN PARAMETERS 117
TABLE 12.8 GENSET ENCLOSURE VENTILATION OVERVIEW SCREEN PARAMETERS 119

TABLE 13.1 SMOKE ALARM AND VENTILATION OVERRIDE CONTROL SETPOINTS 122
TABLE 13.2 SMOKE ALARM AND VENTILATION OVERRIDE DIAGNOSTICS EVENTS 123
TABLE 13.3 SMOKE ALARM AND VENTILATION OVERRIDE IO SIGNALS 123

TABLE 14.1 EXHAUST GAS AND AUXILIARY TEMPERATURE SENSORS CHP CONTROL SETPOINTS 125
TABLE 14.2 EXHAUST GAS DIAGNOSTICS EVENTS 127
TABLE 14.3 AUXILIARY TEMPERATURE SENSORS CHP DIAGNOSTICS EVENTS 128
TABLE 14.4 EXHAUST GAS AND AUXILIARY TEMPERATURE SENSORS CHP DATA FEEDBACK 129
TABLE 14.5 EXHAUST GAS AND AUXILIARY TEMPERATURE SENSORS CHP IO SIGNALS 129
TABLE 14.6 EXHAUST GAS TEMPERATURE OVERVIEW PARAMETERS 130
TABLE 14.7 AUXILIARY TEMPERATURE OVERVIEW PARAMETERS 132
TABLE 14.8 AUXILIARY TEMPERATURE PARAMETERS (UNDER CONFIGURE SCREEN) 134

TABLE 15.1 ETHERNET BASED REMOTE MODULE CONFIGURATION CODES AND IP ADDRESSES 135
TABLE 15.2 CONFIGURATION CODE (CHP & CONTAINER) 136

©2024 Caterpillar. All rights reserved.

Caterpillar: Confidential Green
Caterpillar: Confidential Green

TABLE 15.3 CONFIGURATION CODE (JW & SCAC) 136
TABLE 15.4 CONFIGURATION CODE (JW, SCAC, CHP, CONTAINER) 136
TABLE 15.5 CHP & CONTAINER IO CARD DETAILS 137
TABLE 15.6 JW & SCAC IO CARD DETAILS 139
TABLE 15.7 JW, SCAC, CHP, CONTAINER IO CARD DETAILS 141
TABLE 15.8 SHOW/HIDE RULES FOR DIGITAL I/O SCREENS 145
TABLE 15.9 SHOW/HIDE RULES FOR ANALOG I/O SCREENS 146
TABLE 15.10 NUMBER OF I/O CARDS PER I/O MODULE 147

©2024 Caterpillar. All rights reserved.

Caterpillar: Confidential Green
Caterpillar: Confidential Green

THIS PAGE INTENTIONALLY LEFT BLANK

©2024 Caterpillar. All rights reserved.

Caterpillar: Confidential Green
Caterpillar: Confidential Green

Information contained in this publication may be considered confidential. Discretion is recommended when distributing.
Materials and specifications are subject to change without notice.

© 2025 Caterpillar. All Rights Reserved. CAT, CATERPILLAR, LET'S DO THE WORK, their respective logos, "Caterpillar Corporate Yellow," the "Power Edge" and Cat "Modern Hex" trade dress as well as corporate and product identity used herein, are trademarks of Caterpillar and may not be used without permission.

www.cat.com/electricpower

©2024 Caterpillar. All rights reserved.

Caterpillar: Confidential Green
Caterpillar: Confidential Green